Santa Ana Watershed Project Authority
Inland Empire Brine Line Reach V Pipeline Condition Study
Final Report

RMC
Water and Environment

May 10, 2013

Table of Contents

Executive Summary……i
ES-1 Purpose of Report……i
ES-2 Risk Assessment Findings……i
ES-3 Project Recommendations……ii
ES-4 Summary of Project Costs……iii

Section 1 Introduction……1
Section 2 Background and Project Location……1
Section 3 Existing Conditions along the Alignment……4
3.1 Geotechnical Conditions……4
3.1.1 General Site Soil Characterization……4
3.1.2 Existing Pipe Depth……5
3.1.3 Test Pit Soil Data……6
3.1.4 Pipe Ovality……7
3.2 Existing Utilities……9
3.3 Land Use and Key Areas……10
3.4 Traffic and Roadway Usage……10
3.5 Environmental Factors……12
3.6 System Hydraulics……14
3.6.1 System Hydraulics Overview……14
3.6.2 Surge Analysis……17
3.6.3 Reach V Existing System Hydraulic Characteristics……17
Section 4 Risk Assessment Summary……22
4.1 Risk Based Approach……22
4.2 Risk Assessment Results……23
Section 5 Rehabilitation Options Evaluated for Short and Long-Term Projects……31
5.1 Pressure Grouting……31
5.2 Tight Fit HDPE Lining……32
5.3 Pipe Bursting……32
5.4 Open Cut Replacement……32
5.4.1 General Description……32
5.4.2 Construction Impacts……33
5.4.3 Hydraulic Impacts……33
5.5 Pressure Cured-In-Place Pipe Lining……34
5.5.1 General Description……34
5.5.2 Construction Impacts……34
5.5.3 Hydraulic Impacts……37
Section 6 Maintenance Access Structures, Isolation Valves, and Air/Vacuum Valves…49
6.1 Maintenance Access Structures……49
6.2 Isolation Valves……49

6.3 Air/Vacuum Valves……51
Section 7 Near, Short, and Long-Term Project Recommendations……54
7.1 Recommendations Summary……54
7.2 Hydraulic Impacts……61
7.3 Impact to Existing Utilities……61
7.4 Traffic Impacts……62
7.4.1 General Permitting Requirements……62
7.5 Residential and Commercial Impacts……62
7.5.1 Local Traffic……62
7.5.2 Noise……63
7.5.3 Impacts to Local Businesses……63
7.6 Anticipated Construction Easement Requirements……63
Section 8 Project Phasing and Implementation……64
8.1 Near-Term Maintenance Access Structure Installation Project……64
8.1.1 Recommended Phasing……64
8.1.2 Brine Flow Management……65
8.1.3 Anticipated Down Time for Customers……65
8.1.4 Construction Duration……66
8.2 Short-Term Pressure CIPP Lining Rehabilitation Project……67
8.2.1 Recommended Phasing……67
8.2.2 Bypass Pumping……67
8.2.3 Anticipated Down Time for Customers……68
8.2.4 Construction Duration……68
8.3 Long-Term Pressure CIPP Lining Rehabilitation Project……69
8.3.1 Recommended Phasing……69
8.3.2 Bypass Pumping……69
8.3.3 Anticipated Down Time for Customers……69
8.3.4 Construction Duration……69
8.4 Overall Project Implementation Schedule……70
Section 9 CEQA Documentation……72
Section 10 Construction Costs for Recommended Projects……74
10.1 Accuracy……74
10.2 Benchmark……74
10.3 Unit Cost Basis……74

List of Tables

Table ES - 1: Risk Assessment Results……..i
Table ES - 2: Summary of Project Recommendations……..ii
Table ES - 3: Summary of Project Costs……iii

Table 1: Compaction Test Results at 11 Test Pits……..7
Table 2: Pipe Ovality Measured at 11 Test Pits……8
Table 3: Summary of Current Daily Average Flows from EMWD Lateral……14
Table 4: Summary of Pipe Segment by Contract……...22
Table 5: Categorization of Risk Assessment Results……24
Table 6: Pressure CIPP Productivity……..37
Table 7: Values Used in Calculating Pressure CIPP Lining Thickness……38
Table 8: Summary of CIPP Pressure Lining Impacts on the Brine Line……40
Table 9: Existing Air, Vacuum, and Combination Valves on Reach V of the Brine Line……51
Table 10: Recommendations for Valve Retrofit or Replacement……51
Table 11: Comparison of Existing and Recommended Air Release Valve Dimensions..53
Table 12: Known Existing Utilities in the Vicinity of Planned MAS Locations……61
Table 13: Construction Steps for Concurrent Installation of Two MAS Structures……66
Table 14: Anticipated Construction Duration for Short-Term Pressure CIPP Lining Rehabilitation Project……69
Table 15: Anticipated Construction Duration for Long-Term Pressure CIPP Lining Rehabilitation Project……70
Table 16: Summary of Estimated Conceptual Level Construction Costs for Near, Short, and Long-Term Projects……74
Table 17A: Near-Term Conceptual Level Construction Cost Estimate……76
Table 17B: Maintenance Access Structure Cost Estimate Detail for Near-Term Project……77
Table 18: Short-Term Conceptual Level Construction Cost Estimate……78
Table 19: Long-Term Conceptual Level Construction Cost Estimate……79

List of Figures

Figure 1: Inland Empire Brine Line……2
Figure 2: Brine Line Reach V, Contracts II and III……3
Figure 3: Commercial/Roadway Development along Reach V in the Last 12 Years.....6
Figure 4: Contracts II/III Land Use and Key Areas……11
Figure 5: Flora and Fauna Habitat Areas along Reach V……13
Figure 6: EMWD Brine Line Lateral and Reach V Pipeline……16
Figure 7: Existing System, 3.25 MGD, Pressures on Reach II and III and Area of Concern Contract IV……18

Figure 8: Existing System, 3.25 MGD, Velocities on Reach II and III and Area of Concern Contract IV……19
Figure 9: Existing System, 11 MGD, Pressures on Reach II and III and Area of Concern Contract IV……20
Figure 10: Existing System, 11 MGD, Velocities on Reach II and III and Area of Concern Contract IV……21
Figure 11: Reach V High Risk Segment Project Drivers……25
Figure 12: Basis for Recommended Short-Term Project, Contracts II and III……26
Figure 13: Basis for Recommended Long-Term Project, Contracts II and III……27
Figure 14: Basis for Recommended Short-Term Project, Contract IV……28
Figure 15: Basis for Recommended Long-Term Project, Contract IV……29
Figure 16: Combined Long and Short-Term Projects, Contracts II, III, and IV……30
Figure 17: Access Pit Detail……35
Figure 18: Short-Term Project, 3.25 MGD, Pressures on Contracts II, III, and IV……41
Figure 19: Short-Term Project, 3.25 MGD, Velocities on Contracts II, III, and IV……42
Figure 20: Short-Term Project, 11 MGD, Pressures on Contracts II, III, and IV……43
Figure 21: Short-Term Project, 11 MGD, Velocities on Contracts II, III, and IV……44
Figure 22: Long-Term Project, 3.25 MGD, Pressures on Contracts II, III, and IV……45
Figure 23: Long-Term Project, 3.25 MGD, Velocities on Contracts II, III, and IV……46
Figure 24: Long-Term Project, 11 MGD, Pressures on Contracts II, III, and IV……47
Figure 25: Long-Term Project, 11 MGD, Velocities on Contracts II, III, and IV……48
Figure 26: Maintenance Access Structure Detail……50
Figure 27A: Approximate Planned Location of Maintenance Access Structures, Isolation Valves, and Access Tees Contracts II and III……55
Figure 27B: Approximate Planned Location of Maintenance Access Structures, Isolation Valves, and Access Tees Contracts II and III……56
Figure 27C: Approximate Planned Location of Maintenance Access Structures, Isolation Valves, and Access Tees Contracts II and III……57
Figure 27D: Approximate Planned Location of Maintenance Access Structures, Isolation Valves, and Access Tees Contracts II and III……58
Figure 27E: Approximate Planned Location of Maintenance Access Structures, Isolation Valves, and Access Tees Area of Concern, Contract IV……59
Figure 27F: Approximate Planned Location of Maintenance Access Structures, Isolation Valves, and Access Tees Area of Concern, Contract IV……60
Figure 28: Potential Construction and Permanent Easement Locations……64
Figure 29: Overall Suggested Implementation Schedule for Near, Short, and Long-Term Projects……73

Appendices

Appendix A - Summary of Utility Information
Appendix B - Final Reach V Surge Analysis Report
Appendix C - Detailed Breakdown of Risk Assessment Results
Appendix D - Inventory of Existing Air Valves on Reach V
Appendix E - Cost Estimate Unit Cost Criteria

Executive Summary

ES-1 Purpose of the Report

On October 18, 2011, a brine spill was reported on Reach V (Contract II and III) of the Inland Empire Brine Line (Brine Line) near the intersection of Temescal Canyon Road and Cabot Road in the City of Corona. The condition of the pipe in this location raised concern over the quality of construction and structural integrity of the entire Reach V pipeline with specific emphasis on Contracts II and III where the spill was located.

The purpose of this Condition Study is to provide a pipeline condition study of Reach V (Contract II and III) and other known areas of concern in Contracts IV and V including a risk assessment and surge analysis. This study will define the limits of needed repair work and recommend appropriate rehabilitation and/or replacement methods for specific locations of highest risk along the alignment. In addition, a budgetary construction cost estimate is provided for the recommended alternatives to allow SAWPA to prudently budget the work.

ES-2 Risk Assessment Findings

A risk based approach was used in order to prioritize condition assessment and capital improvement project (CIP) activities. The total Risk per pipe segment was calculated by summing up the Likelihood of Failure Factor scores and multiplying that number by the weighted Consequence of Failure Factor scores. The result was a risk score per pipe segment. The resulting risk scores were then categorized based on risk value and placed in the following categories:

Table ES-1. Risk Assessment Results

Risk Category	Risk Score	CIP Project Definition	Project Timeline	Length of Pipe in Contracts II and III (ft.)	Length of Pipe in Contracts IV and V areas of concern (ft.)	Total Length of Pipe (ft.)
High Risk	>= 50	Short-Term Project (1)	0-3 years	11,954	876(3)	12,830
Medium Risk	>=20<50	Long-Term Project (2)	4-10 years	6,334	1,873(3)	8,207
Low Risk	<20	No Project	N/A	8,353	11,404	19,757
			Total:	26,641	14,153	40,794

(1) In order to facilitate construction packaging, some medium and low risk pipe segments were added to the short-term project.
(2) In order to facilitate construction packaging, some low risk pipe segments were added to the long-term project.
(3) Numbers shown are for area of concern in Contract IV only. There are no required projects for the area of concern in Contract V.

ES-3 Project Recommendations

Table ES-2 provides a summary of project recommendations for Reach V, Contracts II and III as well as areas of concern in Contract IV. Please note that no projects were recommended for the area of concern in Contract V. Recommendations were developed based on:

1. A risk assessment as is described in Section ES-2;
2. A surge analysis of Reach V; and
3. A rehabilitation alternatives analysis including a hydraulic analysis of the existing and future rehabilitated Brine Line

Table ES-2. Summary of Project Recommendations

Project	Anticipated Schedule	Description
Near-Term Manhole Access Structure Installation Project	Prior to Short-Term Project	• Install 26 Manhole Access Structures • Install 26 Plug isolation valves • Install 26 Access tees for future bypass pumping
Short-Term Pressure CIPP Lining Rehabilitation Project	Within 3 years from start of Fiscal Year 2013/2014	• Pressure CIPP Line approximately 12,000 feet of 24-inch PVC pipe in Reach V, Contracts II and III • Pressure CIPP Line approximately 900 feet of 24-inch PVC pipe in Reach V, Contract IV • Replace or modify 11 existing air release valves (CLA-Valve and ARI models)
Long-Term Pressure CIPP Lining Rehabilitation Project	4-10 years from the start of Fiscal Year 2013/2014	• Pressure CIPP Line approximately 6,300 feet of 24-inch PVC pipe in Reach V, Contracts II and III • Pressure CIPP Line approximately 1,900 feet of 24-inch PVC pipe in Reach V, Contract IV • Replace or modify 45 existing air release valves (Crispin and Valmatic models)

In developing these recommendations, the evaluation included consideration of factors such as:

- Impacts to upstream dischargers
- Construction impacts
- Adjacent utilities
- Flow by-pass requirements
- Environmental impacts

- Traffic
- Right-of-way
- Hydraulics
- Schedule
- Cost

It is also recommended that SAWPA monitor low risk areas in Contracts II, III and areas of concern in Contracts IV and V. This would be done independently of the projects identified above. Monitoring of the low risk areas would entail periodic CCTV inspection of those areas identified as low risk. Inspectors should look for any apparent cracks or heavily deflected areas within the pipeline. In order to conduct the monitoring activities, SAWPA will have to either bypass pump between MAS or put the flows into temporary storage. Another option may be waiting until the IEEC has a scheduled shut-down and then temporarily suspend flows from the desalters. SAWPA could then use that window to conduct a CCTV inspection of one or two 1,500 foot sections of pipe. It is recommended to monitor the low risk areas approximately every 2-5 years. A detailed cost estimate and schedule has not been provided for monitoring activities as part of this report.

ES-4 Summary of Project Costs

Table ES-3 is a summary of estimated conceptual level construction costs for the Near, Short and Long-Term Projects as presented and recommended in this report.

Table ES-3. Summary of Project Costs

Project	Estimated Conceptual Level Cost Range[1]
Near-Term Maintenance Access Structure Replacement Project[2]	$1.9 to $3.7 Million
Short-Term Pressure CIPP Lining Rehabilitation Project	$5.4 to $7.1 Million
Long-Term Pressure CIPP Lining Rehabilitation Project	$4.2 to $5.5 Million
Total:	**$11.5 to $16.3 Million**

(1) Low price in range provided is construction subtotal plus 20% Engineering, ESDCs, CM, and cost of water loss (for Near-Term Project only). High price includes 30% conceptual design contingency plus 20% Engineering, ESDCs, CM, and cost of water loss (for Near-Term Project only).

(2) Project includes installation of isolation valves and access tees for future bypass operations.

1 Introduction

The Santa Ana Watershed Project Authority (SAWPA) was formed in 1972 to plan and build facilities to protect water quality in the Santa Ana River Watershed. SAWPA is a Joint Power Authority (JPA) comprised of five (5) member agencies: Eastern Municipal Water District (EMWD), Inland Empire Utilities Agency (IEUA), Orange County Water District (OCWD), San Bernardino Valley Municipal Water District (SBVMWD), and Western Municipal Water District (WMWD). SAWPA owns either capacity rights in, or owns outright, approximately 93 miles of pipeline referred to as the Inland Empire Brine Line (Brine Line). The Brine Line, sometimes also referred to as the Santa Ana Regional Interceptor (SARI), conveys primarily highly saline, non-domestic wastewater from industrial dischargers and municipal desalter facilities within Riverside and San Bernardino Counties. Constructed in the late 1970's through early 2000's, the Brine Line is a network of collector pipelines which was initially constructed in order to protect the inland water quality in the upper Santa Ana River Watershed.

SAWPA owns, operates, and maintains 72 miles of the Brine Line within Riverside and San Bernardino Counties from the Orange/Riverside County Line. This 72 mile portion of Brine Line network is divided into Reaches IV through V. See Figure 1. Orange County Sanitation District (OCSD) manages and maintains an additional 21 miles of the Brine Line within the Lower Santa Ana Watershed inside Orange County.

2 Background and Project Location

Brine Line Reach V, (formerly known as the Temescal Valley Regional Interceptor), was the last section of the Brine Line Network and was constructed in 2001. Reach V runs from the end of Reach IVB in the City of Corona approximately 22 miles south to the EMWD service area. Within its service area EMWD operates its own 9 mile Brine Line Lateral to collect high saline discharges. Existing connections to the EMWD Lateral include a power plant, two (2) existing groundwater desalters, and one (1) industrial manufacturer. EMWD has indicated that one of the existing groundwater desalters will increase its production in June of 2013. This will bring the average daily flows conveyed through Reach V to 3.25 million gallons per day (MGD). The maximum design capacity of Reach V is approximately 11MGD.

Reach V consists of mostly 24-inch and 30-inch PVC pipe with a section of 26-inch HDPE pipe. It was designed as five separate construction contracts, each totaling 25,000-30,000 feet in length. Each of the sections was publicly bid and one Contractor (Kenko, Inc.) was successful in securing the construction contracts for all five sections.

On October 18, 2011, a brine spill was reported on Reach V (Contract II and III) near the intersection of Temescal Canyon Road and Cabot Road in the City of Corona. Subsequent excavation of the Brine Line in this location revealed the pipeline failed with a longitudinal crack along the invert through a joint. At the time of the failure, the pipeline was at an estimated pressure of 34 pounds per square inch (psi). The pipe material at this location was confirmed to be 24-inch PVC IPEX Centurion DR 51 pipe with an internal pressure rating of 80 psi.

Once the excavation around the failure was cleaned up and the existing pipe exposed, SAWPA observed the pipe to be "out of round" or slightly oval. In addition, the soil material in the pipe zone and the backfill was found to contain large cobbles, and no sand visible in the pipe zone (bedding) as was required by the original Contract Documents. Overall, the condition of the pipe in this location raised concern over the quality of construction and structural integrity of the entire Reach V pipeline with specific emphasis on Contracts II and III where the spill was located as well as two areas of concern in Contracts IV and V.

Figure 1. Inland Empire Brine Line

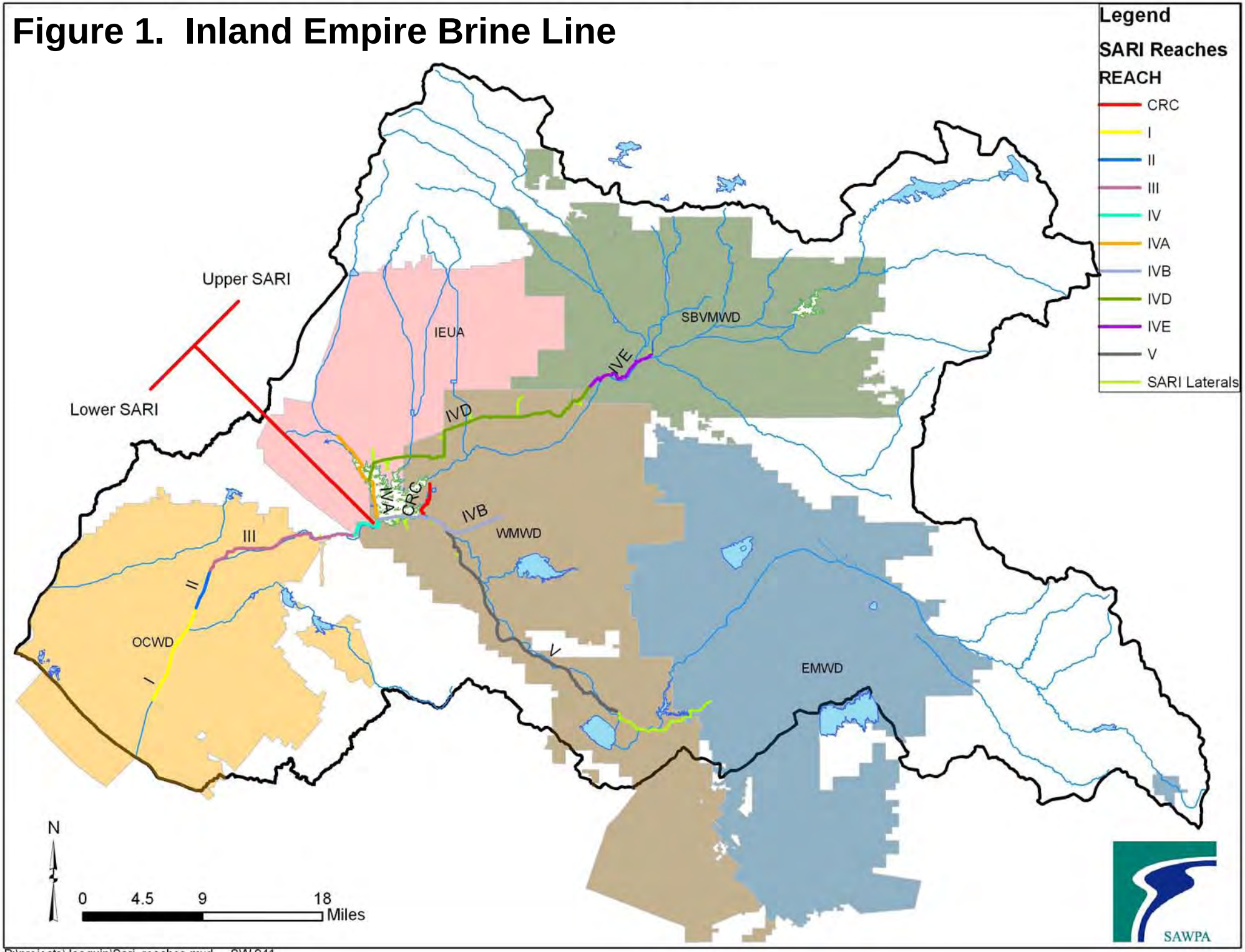

P:\projects\Joaquin\Sari_reaches.mxd SW-941

The Brine Line Reach V, Contracts II and III alignment is entirely within Temescal Canyon Road beginning at Glen Ivy Road in unincorporated Riverside County and traveling northwesterly approximately 5 miles (25,700 feet) to La Gloria Street in the City of Corona. See Figure 2. The areas of concern in Contracts IV and V are located south of this alignment. Contracts II, III, and areas of concern in Contracts IV and V consist entirely of 24-inch PVC pipe of the same make and DR as was discovered at the spill site.

Figure 2. Brine Line Reach V Contracts II and III.

In September 2012, SAWPA convened a panel of experts to evaluate the data collected from five test pits and other investigative work completed, comment on the possible cause(s) of failure, and evaluate options for rehabilitating or replacing the Brine Line. The findings of the expert panel suggested that the pipe failure was caused by the following factors:

- Poor installation/soil compaction
- Lack of specified bedding material
- Brine Line constructed in common trench with 42-inch water line
- Poor sidewall support
- Rocks in pipe zone
- Over deflection of pipe
- Failure of joint gasket
- Added roadway fill

The expert panel suggested that the following actions be taken in order to assess the condition of the pipeline and identify other potential high risk areas:

- Construct additional test pits to determine limits of poor soil compaction and pipe deflection
- Conduct a risk assessment to identify potential high risk areas
- Conduct program level condition assessment
- Perform a surge analysis
- Perform pipe rehabilitation/replacement in over-deflected areas.

The purpose of this Condition Study is to build on the panel's finding and provide a pipeline condition study of Reach V (Contract II and III) and other known areas of concern in Contracts IV and V including a risk assessment and surge analysis. This study will define the limits of needed repair work and recommend appropriate rehabilitation and/or replacement methods for specific locations of highest risk along the alignment. In addition, a budgetary construction cost estimate will be provided for the recommended alternative to allow SAWPA to prudently budget for the work.

3 Existing Conditions along the Alignment

The following is a discussion and summary of known conditions along the Brine Line Reach V Contracts II and III alignment as well as areas of concern for Contracts IV and V.

3.1 Geotechnical Conditions

3.1.1 General Site Soil Characterization

The Inland Empire Brine Line lies within the Peninsular Ranges Province of California. The pipeline alignment is located along the western edge of the Perris block (Cretacious plutonic rocks) adjacent to the Santa Ana Mountains to the west. The separation between these two geographic features is defined by the Elsinore trough. The Elsinore trough is underlain by Quarternary alluvial deposits characterized by recent stream channel deposits, alluvial fan deposits, and alluvium to depths of 100 feet. The young alluvial soil consists primarily of silty sands with sub-angular gravel, and the gravel content tends to increase in areas where the pipeline crosses established washes.

In Contracts II and III, an outcropping of Quarternary terrace deposits exists along the southeastern third of the alignment. The terrace deposits consist of reddish brown clayey sands and clayey silts with angular gravel. A thin veneer of topsoil and slopewash, generally 4 to 9 feet in depth, overlies alluvial soils between Lawson Road and Glen Ivy Road. Groundwater was not encountered in borings completed within the limits of Contracts II and III.

In general, Contracts IV and V consist of sandy alluvial soils made up of unconsolidated fine to course grained sands mixed with angular to sub-angular gravel and cobbles. An outcrop of Jurassic Santiago Peak Volcanics was evident near the intersection of Temescal Canyon Road and Indian Truck Trail in Contract IV where a small fault crosses the pipeline corridor. Lake deposits and generally shallow groundwater are present in Contracts IV and V of the Brine Line.

Additional information and copies of geotechnical boring logs for Contracts II, III, IV and V can be found in the Geotechnical Report Titled "Geotechnical Study: Elsinore Valley Municipal Water District Temescal Canyon Road Waterline Project – Phases 1 & 2 and Santa Ana Watershed Project Authority Temescal Valley Regional Interceptor – Reaches I-V" prepared by DGA Consultants, Inc., April 13, 1999.

3.1.2 Existing Pipe Depth

In Contracts II and III, the existing pipe depth ranges from 5 to 17 feet of cover with an average depth of cover of 9 feet (after additional fill from commercial/roadway improvements). For the areas of concern within Contracts IV and V, the existing pipe depth also ranges from 5 to 17 feet of cover with an average depth of cover of 7 feet. (Also after additional fill from commercial/roadway improvements.)

Three areas of interest along Reach V were identified as having significant commercial/roadway development within the last 10 years. After a review of street improvement plans provided by both Riverside County and the City of Corona, it was determined that street improvements within these developed areas resulted in locations where the Brine Line was subjected to additional compacted fill. Additional fill areas ranged in depth from one to five feet. See Figure 3.

Figure 3: Commercial/Roadway Development along Reach V within the Last 12 Years

3.1.3 Test Pit Soil Data

As was recommended by the expert panel, SAWPA dug 11 test pits along the Contract II, III, IV and V alignment to determine the ovality of the existing pipe, characterize the backfill materials used during construction, and measure compaction values within the trench zone. Section 3.1.4 presents the Agency's findings regarding pipe ovality. Table 1 is a summary of backfill materials encountered and compaction measured at the 11 locations. Results, in general, reveal poor compaction at all test pit locations within the pipe backfill zone. Low compaction results indicate the potential for settlement of the trench zone to occur, either immediately following placement of backfill during construction or subsequent to the additional road improvements when any road improvements were completed.

Table 1. Compaction Test Results[(1)] at 11 Test Pits

Test Pit No.	Test Date	Location	Contract No.	In-place Moisture, %	In-Place Dry Density	Max. Dry Density	Required Compaction, %	Relative Compaction Measured, %
1	5/8/12	Station 573+30	II and III	7.8	97.6	135	90	72
2	5/9/12	Station 559+14	II and III	8.4	92.8	135	90	69
3	5/9/12	Station 558+30	II and III	9.6	96.9	134	90	72
4	5/10/12	Station 553+35	II and III	7.4	91.2	130	90	70
5	5/15/12	Station 550+20	II and III	18.9	90.7	126.2	90	72
6	10/3/12	Station 512+37	II and III	4.0	116.1	135.4	90	79
7	10/23/12	Station 600+10	II and III	3.2	98.7	136.3	90	72
8	12/4/12	Station 371+60	II and III	4.2	92.1	125	90	74
9	1/8/13	Station 419+25	II and III	7.3	116.1	134.4	90	83
10	2/4/13	500' South of Pierce St. on Baker Street	V	6.4	96.4	130.1	90	74
11	2/5/13	Station 211+67	IV	3.3	107.1	126.5	90	85

(1) Results presented for worst case compaction test results. Additional tests were conducted at each test pit.

3.1.4 Pipe Ovality

As mentioned previously, the existing 24-inch pipe is DR 51 PVC. DR 51 pipe has a relatively thin wall (.5 inch) and relies heavily on the sidewall compaction of the trench backfill and pipe zone bedding for its structural strength. In general, pipe deflection values vary with depth of cover and compaction percentages. This is apparent in Table 2. The manufacturer's allowable deflection limit is listed as 7.5 percent. To account for construction tolerance, standard engineering practice is to limit design deflection to 5 percent. Different rehabilitation methods will be considered to remedy the apparent over-deflection of the existing pipe and restore its structural integrity.

Table 2. Pipe Ovality Measured at 11 Test Pits

Test Pit No.	Test Date	Location	**Contract No.**	Depth to Top of Pipe	Average Measured X Dimension[(1)]	Average Measured Y Dimension[(1)]	Ovality, %
1	**5/8/12**	**Station 573+30**	**II and III**	**5'-4"**	**27**	**24.7**	**4.7**
2	**5/9/12**	**Station 559+14**	**II and III**	**7'-10"**	**27.2**	**24.5**	**5.4**
3	**5/9/12**	**Station 558+30**	**II and III**	**10'-6"**	**27.6**	**24.1**	**7.1**
4	**5/10/12**	**Station 553+35**	**II and III**	**7'-2"**	**27.3**	**24.4**	**5.6**
5	**5/15/12**	**Station 550+20**	**II and III**	**9'-0"**	**26.5**	**25.1**	**2.7**
6	**10/3/12**	**Station 512+37**	**II and III**	**5'-11"**	**27.5**	**24.2**	**6.6**
7	**10/23/12**	**Station 600+10**	**II and III**	**11'-0"**	**26.8**	**24.9**	**3.7**
8	**12/4/12**	**Station 371+60**	**II and III**	**6'-2"**	**26.8**	**24.9**	**3.7**
9	**1/8/13**	**Station 419+25**	**II and III**	**7'-3"**	**27.5**	**24.2**	**6.6**
10	**2/4/13**	**500' South of Pierce St. on Baker Street**	**V**	**5'-7"**	**32.8[(2)]**	**31.3**	**2.3**
11	**2/5/13**	**Station 211+67**	**IV**	**4'-7"**	**26[(3)]**	**26**	**0**

(1) Results presented for worst case deflection measurements taken. Additional measurements were taken at each test pit.

(2) Original pipe outside diameter 30 inches.

(3) Original pipe outside diameter 26 inches.

3.2 Existing Utilities

The following utilities are located within the same parallel corridor as or cross the existing Brine Line:

- Storm drains (12" through 54")
- Box culverts
- Telephone
- Fiber optic
- Cable television
- Electric conduit
- 36" Electrical duct
- 3" through 20" Water
- 8" through 15" Sewer
- 8" and 30" Irrigation water
- 10" Reclaimed water
- 3" through 8" Gas
- 6" and 8" High pressure gas
- 30" Water
- 36"- 42" Steel water main.

The 42-inch steel water main is owned and operated by Elsinore Valley Municipal Water District (EVMWD) and was installed at the same time and by the same contractor as the Brine Line in 2001. As a result, there is a reasonable expectation that there is also poor compaction and poor or no bedding material located around the existing water line. In fact, the water line in some spots appears located less than one foot either horizontally or vertically away from the Brine Line. This is unclear in the as-built drawings for both the Brine Line and the water line. It is also important to note that the water line is buried at a similar depth as the Brine Line and it crosses the Brine Line 24 times. Based on the record drawings provided, of those 24 crossing locations, the water line crosses below the Brine Line in all but one location.

The presence of existing utilities, especially the parallel water line, will pose challenges when installing maintenance access structures (MAS) and digging other excavations related to rehabilitation access or pipeline replacement. See Section 6. In addition, the presence of the existing 36"- 42" water line close to the existing Brine Line will make work in and around the existing Brine Line challenging. This will have to be considered further during final design and may require extensive potholing during the design phase.

At the time of printing of this report, existing utility information from local agencies had been requested. However, only a portion of the information had been received and evaluated. It is suggested that the location of utilities be further evaluated during final design once all of the existing utility information has been received and evaluated. This should include the use of potholing at all potential excavation locations to try to avoid having to relocate any existing utilities when siting MAS and other access excavations. In addition, a plan for protecting the water line in place during construction should be addressed in the project specifications. After excavation is completed and work on the Brine Line has been completed, CLSM backfill is recommended in the pipe zone around both the water line and Brine Line to assure proper pipe bedding is achieved. See Appendix A for a summary of utility information requested and received as of May 10, 2013.

3.3 Land Use and Key Areas

Reach V, Contracts II, III, IV, and V of the Brine Line Alignment are generally located in residential areas with zones of commercial and industrial land use. The Southern California 1990 Aerial Land Use Study categorizes land use code descriptions and key signatures in 42 discrete categories. For the purposes of simplification and ease of use on this project, land use types were identified in the vicinity of the Brine Line and separated into 12 categories:

- Commercial/Service – Key Area
- Residential – Key Area
- Industrial – Key Area
- Commercial/Service
- Industrial
- Recreational and Open Space
- Residential
- Agricultural
- Infrastructure
- Mixed Urban/Developed Parking
- Vacant Natural Land
- Under Construction

See Figure 4 for an overview of the land use locations and designations for the land adjacent to Reach V, Contracts II and III of the Brine Line. Key areas were those areas as selected by SAWPA staff where a pipe failure or construction activities associated with the Brine Line would have the biggest impact to those facilities. The facilities include the City of Corona Fire Station, City of Corona Water Reclamation Facility, Dos Lagos Shopping Center, Lee Lake Water Treatment Plant, and the Dawson Canyon Landfill Facility.

3.4 Traffic and Roadway Usage

A majority of Reach V, Contracts II and III of the Brine Line is located within Temescal Canyon Road within unincorporated Riverside County and the City of Corona. Temescal Canyon Road is part of a system of major and secondary arterials and collector roads serving local users. With sections of both bi-directional two and four lane travel corridors, Temescal Canyon Road generally runs along either side of Interstate 15 and serves the communities and industrial sites in the Temescal Canyon.

Temescal Canyon Road is generally considered a moderately traveled roadway with higher volumes of traffic traveling in the northbound direction during morning commute hours. In addition, there are areas of high traffic volume in and around the Dos Lagos Shopping Center as well as the Route 15 on and off-ramps. As of the printing of this report, there were no major plans for any roadway improvements within the project area.

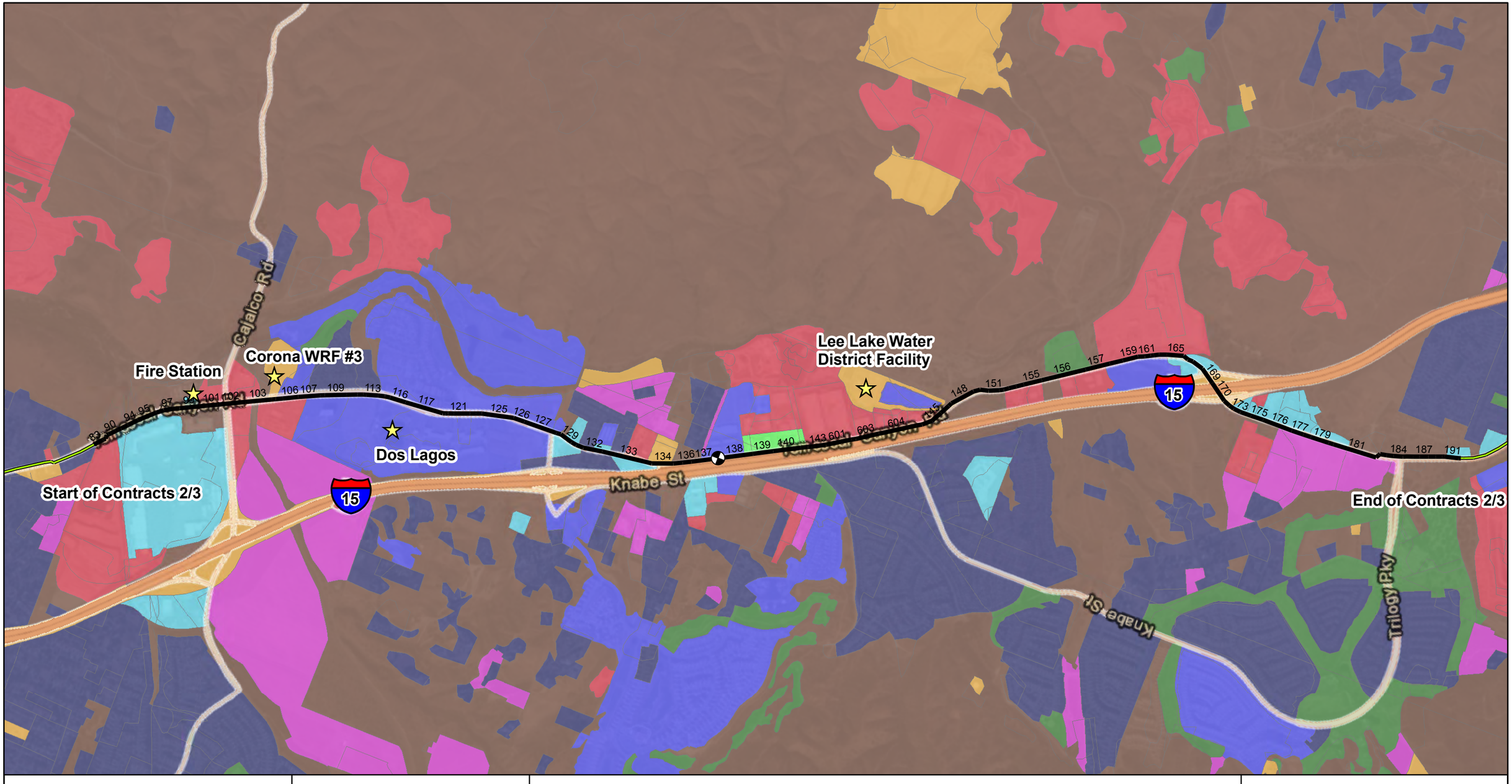

SAWPA

RMC Water and Environment

N

2,000 1,000 0 Feet

Legend

- Main Gate Valves
- Other Contracts
- Contracts 2-3
- Key Areas

SCAG 2005 Gen Categories

- Under Construction
- Agriculture
- Commercial/Service
- Industrial
- Infrastructure
- Mixed Urban/Developed
- Open Space and Recreation
- Residential
- Vacant Natural Land

Figure 4

Contracts II/III
Land Use and Key Areas

3.5 Environmental Factors

The Temescal Canyon Area is the western gateway to Riverside County. The area includes the City of Corona which straddles the 91 freeway corridor, a critically important path of travel for commuters to Orange County, and Interstate 15, an important route out of the Canyon in an emergency. Temescal Canyon also includes unincorporated area ranging from largely open space area at the western edge of the Santa Ana Canyon to the Santa Ana Mountains and Cleveland National Forest, the Santa Ana River, and the Gavilan Hills and Temescal Wash.

Proximity to Potential Habitat for Endangered Flora and Fauna

This narrow canyon includes potential habitat for the endangered flora and fauna as listed below. See Figure 5 for locations of these habitat areas along Reach V of the Brine Line alignment.

- Brauton's milk-vetch
- Coastal California gnat catcher
- San Bernardino Kangaroo Rat
- Santa Ana Sucker
- Southwestern Willow Flycatcher
- Spreading Navarretia
- Stephen's Kangaroo Rat
- Thread-leaved Broadlaea

Though the existing Brine Line alignment is located almost entirely within paved roads and travelled right-of-way, any potential impacts to the local environment must be minimized and/or mitigated. See Section 9 for further discussion on Environmental Documentation for this project.

Proximity toTemescal Wash

The Temescal Wash is located between the Gavilan Hills and the Santa Ana Mountains. Although dry most of the year, the wash serves as an outlet for Lake Elsinore and eventually drains into the Santa Ana River. While the wash runs in a generally northwest/southeast direction, it also provides a critical perpendicular linkage for animals between the mountain and hill habitats on either side. Reach V of the Brine Line parallels the Temescal Wash for much of its alignment and varies in distance from the wash from less than 10 feet to almost a mile. A majority of the alignment is within 250 feet of the Temescal Wash. As such, spill prevention and the implementation of Best Management Practices will be key components to the design of this project.

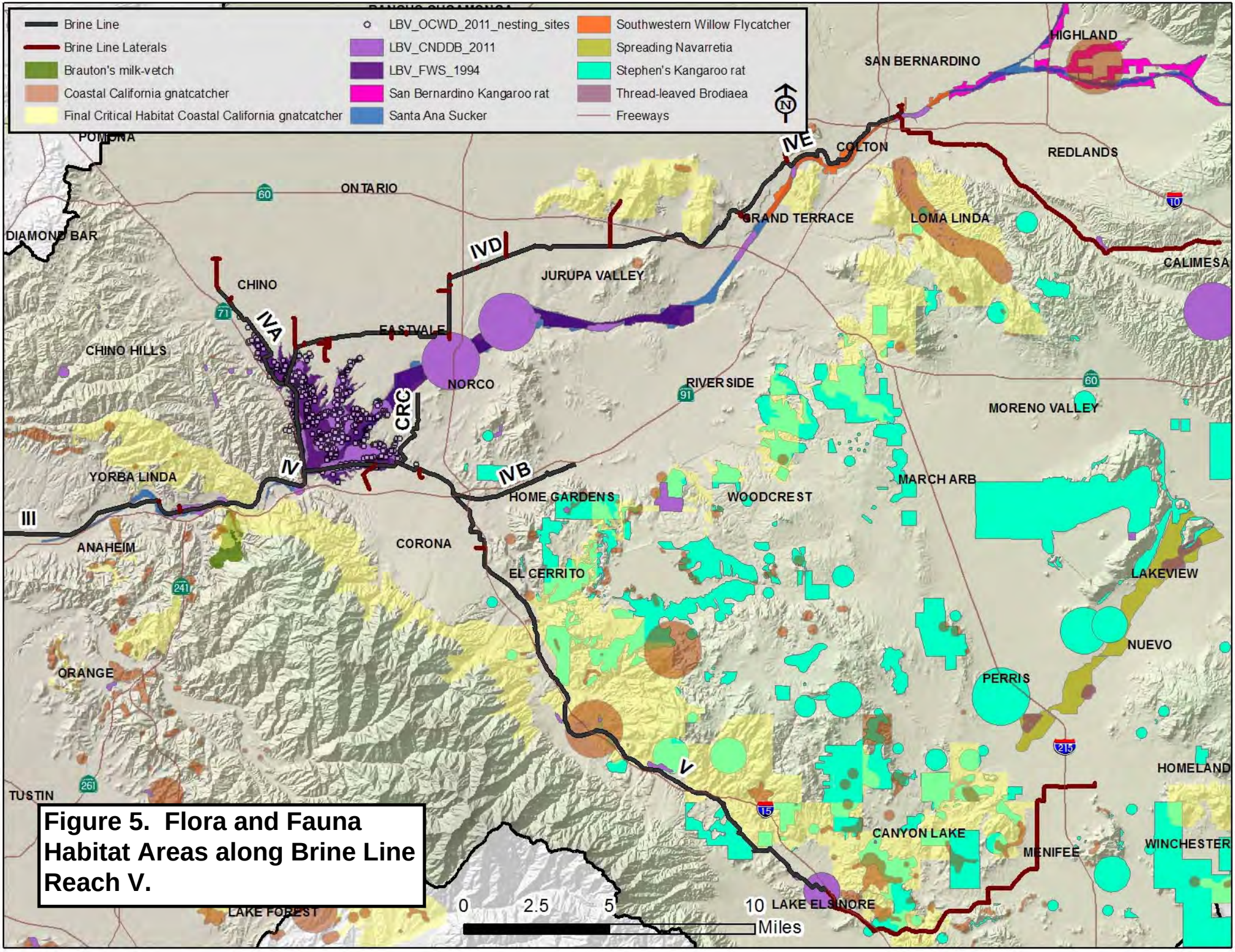

Figure 5. Flora and Fauna Habitat Areas along Brine Line Reach V.

3.6 System Hydraulics

3.6.1 System Hydraulics Overview

Reach V of the Brine Line consists of approximately 22 miles of 24-inch and 30-inch diameter PVC and 26-inch diameter HDPE pipe of various pipe wall thicknesses or diameter ratios (DRs). At the upstream end of the reach where Reach V connects into the EMWD lateral, a pressure sustaining station structure (PSS) delivers flow to Reach V.

Flow that eventually travels into Reach V originates in the existing EMWD Brine Line Lateral directly upstream of Reach V. This lateral is supplied flow from several different customers from a series of three pump stations located at the Inland Empire Energy Center (IEEC), the EMWD Menifee/Perris I Desalter Facility, and the Perris II Desalter Facility (online 2017). The Brine Line Lateral consists of approximately 27,200 feet of 12, 18, and 24-inch PVC pipe from IEEC to the Menifee/Perry I Desalter site, approximately 9,300 feet of 18-inch PVC pipe from the future Perris II Desalter to the line from IEEC, and 49,900 feet of 30-inch cement mortar lined and coated steel pipe from the Menifee/Perris I Desalter Facility to the PSS.

When the PSS is in service, it is operated by EMWD to maintain approximately 100 psi of upstream pressure so the pressure in the Brine Line Lateral remains above the pipeline elevation and there are no sections of open channel flow. Upon entering Reach V of the Brine Line on the downstream side of the PSS, the flow transitions between open channel and pipe full flow for its entire length to the end of the reach. At this point, it ties into Reach IVB of the Brine Line and continues to the other downstream reaches of the interceptor, flowing by gravity for its entire length.

Currently, the average daily flow from the EMWD lateral is approximately 1.78 million gallons per day (MGD). See Table 3.

Table 3. Summary of Current Average Daily Flows from EMWD Lateral

	Total Flow (Millions of Gallons)						
EMWD Customer	October, 2012 (31 Day Billing Cycle)	November, 2012 (32 Day Billing Cycle)	December, 2012 (30 Day Billing Cycle)	January, 2013 (29 Day Billing Cycle)	February, 2013 (28 Day Billing Cycle)	March, 2013 (32 Day Billing Cycle)	Daily Average (6 Month Period)
Menifee Desalter (Total)	23.40	21.33	26.51	25.93	21.83	20.60	0.77
Perris Desalter (Total)	23.90	20.00	24.54	22.82	18.78	20.65	0.72
Temp Discharge	1.66	1.27	0	0	0	0	0.02
IEEC	12.39	10.98	5.91	2.44	5.15	5.70	0.23
HexFex (Indirect)	1.53	1.18	1.19	1.29	1.34	1.58	0.04
TOTAL	**62.87**	**54.76**	**58.14**	**52.48**	**47.10**	**48.53**	**1.78**

SAWPA contractually permits EMWD the following discharge limits for its customers:

- Menifee Desalter: 1.3 MGD
- Perris Desalter: 2.4 MGD
- IEEC: 1.2 MGD

Total: 4.9 MGD

An average of the current EMWD Customer actual 6-month discharge and the permitted discharge limit is approximately 3.25 MGD. Therefore, modeling scenarios of existing conditions were run based on a minimum flow of approximately 3.25 MGD. Reach V of the existing Brine Line has a maximum design capacity of 11 MGD.

Figure 6 contains a profile of the pipeline system with the air valve locations along with approximate HGL elevations for flows of 3.25 MGD and 11 MGD. Note that these HGL elevations assume that all the air valves on the line are operational. See Section 6 for further discussion regarding Air Valves on Reach V of the Brine Line.

SAWPA - Inland Empire Brine Line Reach V Pipeline Condition Study

Figure 6 - EMWD Brine Line Lateral and Reach V pipeline

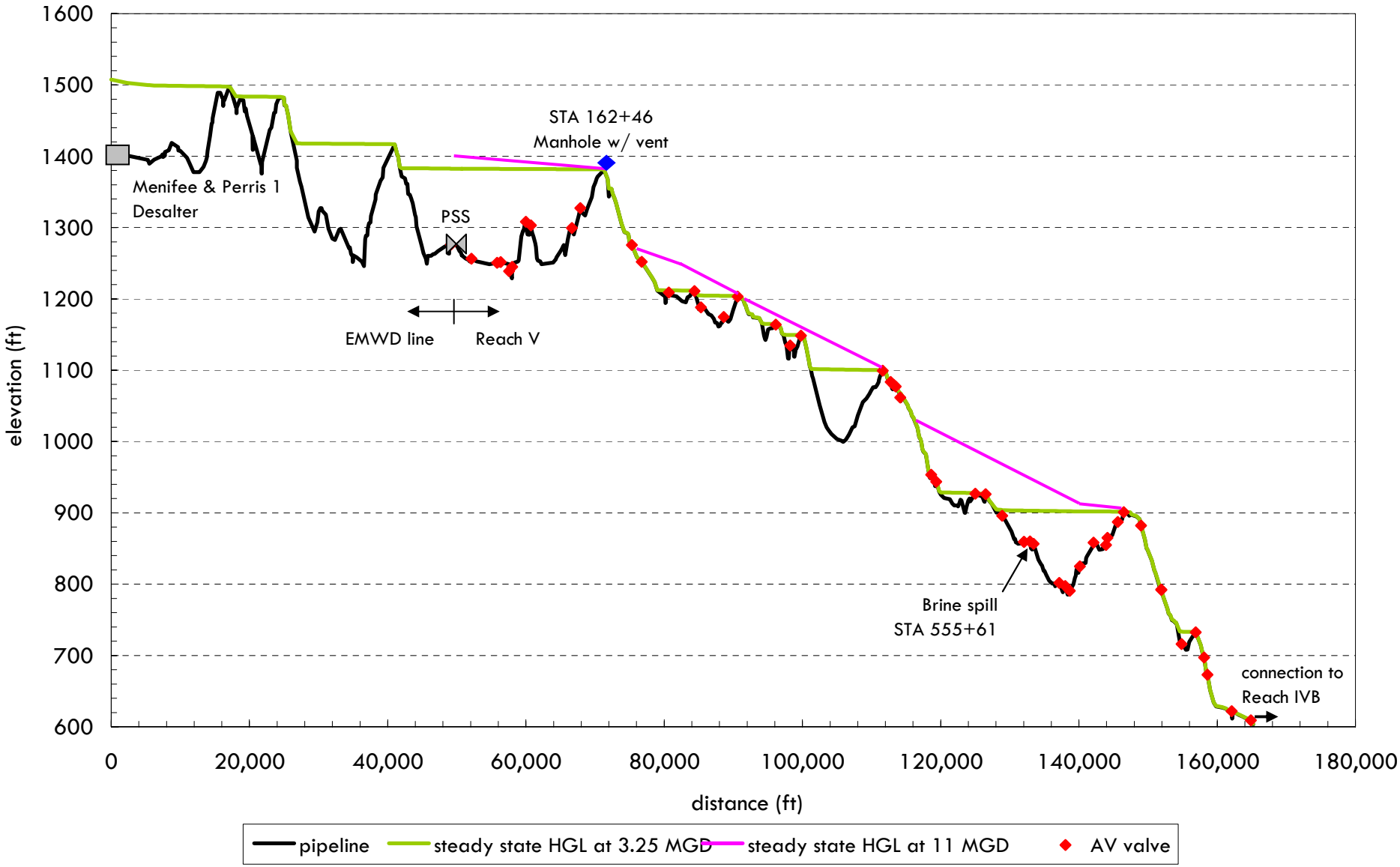

FLOW SCIENCE®

3.6.2 Surge Analysis

A pressure surge analysis of EMWD's Brine Line Lateral was performed by CDM. Results of this analysis are discussed in a draft technical memorandum dated September 20, 2010. This analysis started at the IEEC pump station and terminated at the PSS; it did not analyze the effect the pressure surges might have on Reach V of the Brine Line. The CDM analysis showed that the loss of power to the three pump stations feeding the Brine Line Lateral would result in negative pressure issues at the high points along the EMWD lateral.

Per recommendations from the expert panel, another pressure surge analysis was completed for Reach V of the Brine Line for SAWPA in March and April of 2013. The conclusion from this analysis was that the pressure waves that propagate through the Brine Line Lateral will travel into Reach V of the Brine Line through the PSS. However, the vent at the manhole located at the local high point at Station 162+46 will transition the flow from pressure full pipe to open channel gravity flow downstream at this location. The pressure downsurge wave from the pump stations would not pass this point. Therefore, it was concluded that it does not seem possible that a pressure surge from these pump stations could lead to any surge failures in Reach V of the Brine Line. As part of this report, further discussion and recommendations were presented regarding Air/Vacuum Valves. This information is presented in Section 6 of this report. For a full copy of the Final Reach V Surge Analysis Report see Appendix B.

3.6.3 Reach V Existing System Hydraulic Characteristics

As mentioned above, the average of the current EMWD Customer actual 6-month discharge and the permitted discharge limit is approximately 3.25 MGD. Therefore, modeling scenarios of existing conditions were run based on a minimum flow of approximately 3.25 MGD. At these existing flows, Reach V of the Brine Line experiences system operating pressures ranging from 0.15 pounds per square inch (psi) to 50.97 psi depending on the profile geometry of the existing alignment. Velocities range from 1 to 12.8 feet per second.

In the future when Reach V of the Brine Line is at a full operating flow capacity of 11 MGD, the pipeline will experience system operating pressures ranging from 0.27 psi to 55.84 psi and velocities will range from 3.3 to 16 feet per second. See Figures 7 through 10 for a visual representation of system pressures and velocities in the existing Reach V system for existing and projected future flows.

SAWPA

RMC Water and Environment

N

3,000 1,500 0 Feet

Legend

- Main Gate Valves
- Other Contracts
- Key Areas
- 0 - 5 psi
- 5 - 10 psi
- 10 -25 psi
- 25 - 50 psi
- > 50 psi

Figure 7

Existing System with 3.25 MGD Pressures for Reach V Contracts II/III and Area of Concern in Contract IV

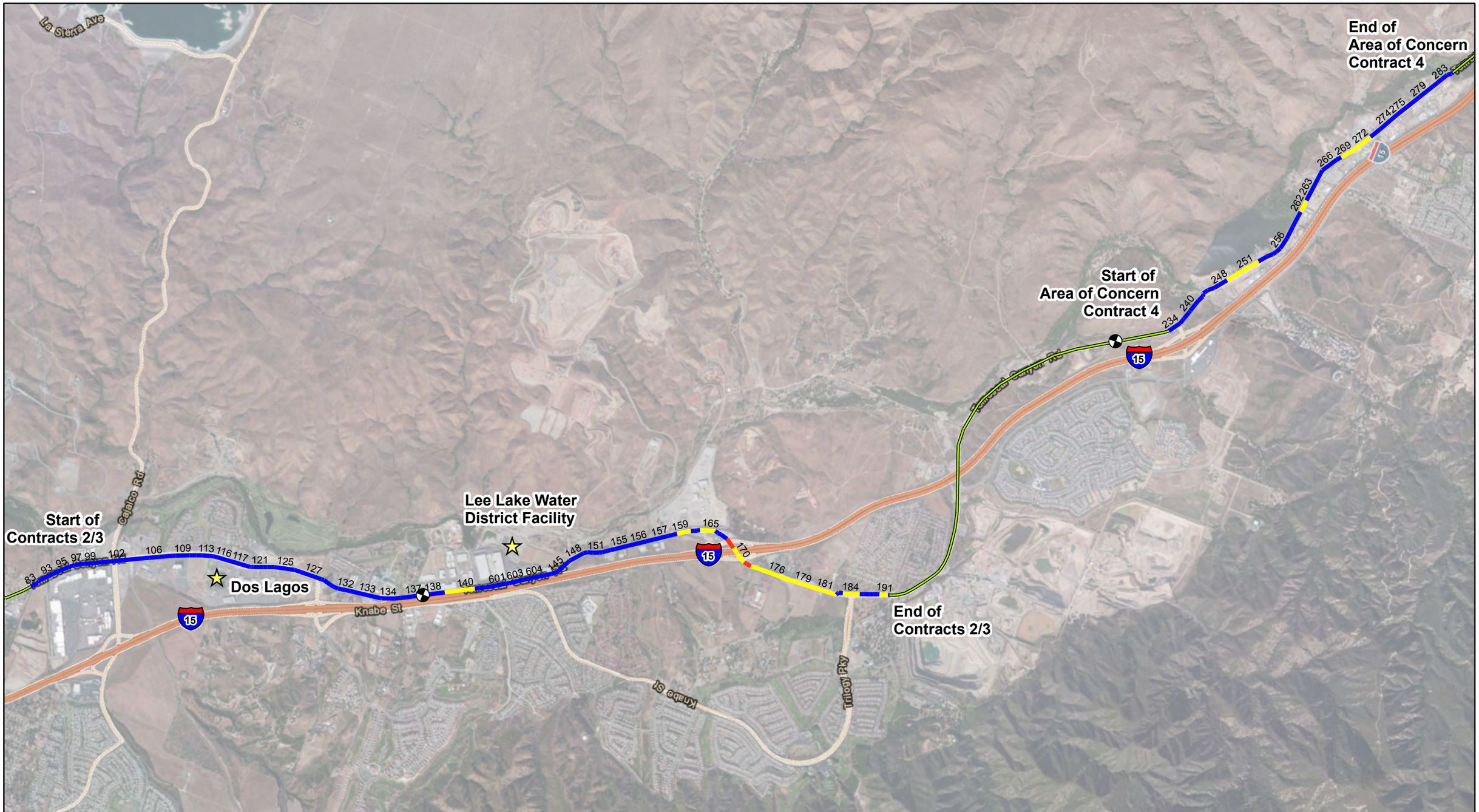

SAWPA

RMC Water and Environment

N

3,000 1,500 0 Feet

Leg end

- Main Gate Valves
- Other Contracts
- Key Areas
- 0 - 5 fps
- 5 - 10 fps
- > 10 fps

Figure 8

Existing System with 3.25 MGD
Velocities for Reach V Contracts II/III
and Area of Concern in Contract IV

SAWPA

RMC Water and Environment

N

3,000 1,500 0 Feet

Leg end

- Main Gate Valves
- Other Contracts
- Key Areas
- 0 - 5 psi
- 5 - 10 psi
- 10 - 25 psi
- 25 - 50 psi
- > 50 Psi

Figure 9

Existing System with 11 MGD Pressures for Reach V Contracts II/III and Area of Concern in Contract IV

SAWPA

RMC Water and Environment

N

3,000 1,500 0 Feet

Leg end

- Main Gate Valves
- Other Contracts
- Key Areas
- 0 - 5 fps
- 5 - 10 fps
- 10 - 15 fps
- > 15 fps

Figure 10

Existing System with 11 MGD
Velocities for Reach V Contracts II/III
and Area of Concern in Contract IV

4 Risk Assessment Summary

4.1 Risk Based Approach

As mentioned previously, SAWPA had limited data to determine which sections of Reach V Contracts II and III and areas of concern in Contracts IV and V of the Brine Line needed additional condition assessment and/or rehabilitation or replacement. Because of the limited availability of directly measured data, a risk based approach was used in order to prioritize condition assessment and Capital Improvement Project (CIP) activities. Readily available information as summarized in Section 3 was used to conduct a Risk Assessment of the Brine Line in order to prioritize future system assessment and repairs. Prioritization was done by pipe segment. A pipe segment is defined as a discrete section of pipe along Reach V Contracts II and III or areas of concern in Contracts IV or V. Pipe segments came directly from SAWPA's existing hydraulic model of Reach V. Each segment was broken out of the system based on hydraulic grade breaks within the existing pipe profile. A summary of pipe segments by Contract is as shown in Table 4.

Table 4. Summary of Pipe Segment by Contract

Reach V Contract	Number of Pipe Segments	Average Length Per Pipe Segment
Contracts II/III	120	224 feet
Area of Concern in Contract IV	54	217 feet
Area of Concern in Contract V	8	306 feet

The basis of the Risk Assessment was the idea that Risk = Likelihood of Failure X Consequence of Failure. This basic equation as jointly developed by the National Association of Clean Water Agencies (NACWA), the Water Environment Federation (WEF), and the Association of Metropolitan Water Agencies (AMWA) was used to calculate an overall asset risk score which was used to prioritize future projects. The following is a discussion of each of the components of that equation.

Likelihood of Failure

Likelihood of Failure scoring was based upon the existing condition of the pipe. Because there was limited directly measured condition data for the Brine Line, RMC relied on data collected from the 11 test pits as well as data that could be directly measured from the existing as-built drawings. The Likelihood of Failure score was based on the following information:

- Original pipe depth
- Change in pipe depth due to roadway improvements
- Pipe material
- Soil compaction data (from test pits)
- Ovality data (from test pits)
- Existing pipe pressure

Consequence of Failure

Consequence of Failure scoring was based on factors that would affect the overall risk associated with the construction of improvements to the existing Brine Line. These included the following:

- Commuter Impacts
  - # of traffic lanes (2 or 4)
  - Roadway geometry (shoulder, median, intersection, bridge)
  - Pipe location (east, west, median, crossing road)
  - Traffic flow rates
  - Caltrans right-of-way and 100 foot buffer
- Surface Water Impacts
  - Distance from center of pipe to edge of Temescal Wash
  - Major channel or other waterway crossings
- Environmental Impacts
  - Within critical habitat area
  - Within critical habitat buffer
- Land Use Impacts
  - Higher weighted scores for pipe located within Residential, Commercial, and Caltrans land use areas.
  - Higher weighted scores for Key Areas (See Section 3.3)
- Infrastructure Impacts
  - Horizontal distance to water line
  - Vertical distance to water line
  - Crossing water line (above or below)
  - Horizontal distance to high pressure gas mains
  - Horizontal distance to telecomm (telephone, fiber optic, cable TV., etc)
  - Horizontal distance to storm drains and other utilities (electrical conduits, duct banks, etc.)

Based upon discussion with SAWPA and EMWD, the Consequence of Failure factors were assigned the following weighting:

- Commuter Impacts – 15%
- Surface Water Impacts – 30%
- Environmental Impacts – 20%
- Land Use Impacts – 20%
- Infrastructure Impacts – 15%

4.2 Risk Assessment Results

The total Risk per pipe segment was calculated by summing up the Likelihood of Failure Factor scores and multiplying that number by the weighted Consequence of Failure Factor scores. The result was a risk score per pipe segment. The resulting risk scores were then categorized based on risk value and placed in categories as presented in Table 5 below. See Appendix C for a more detailed breakdown of Risk Assessment Results.

Table 5. Categorization of Risk Assessment Results

Risk Category	Risk Score	CIP Project Definition	Project Timeline	Length of Pipe in Contracts II and III (ft.)	Length of Pipe in Contracts IV and V areas of concern (ft.)	Total Length of Pipe (ft.)
High Risk	>= 50	Short-Term Project [(1)]	0-3 years	11,954	876[(3)]	12,830
Medium Risk	>=20<50	Long-Term Project [(2)]	4-10 years	6,334	1,873[(3)]	8,207
Low Risk	<20	No Project	N/A	8,353	11,404	19,757
			Total:	26,641	14,153	40,794

(1) In order to facilitate construction packaging, some medium and low risk pipe segments were added to the short-term project.
(2) In order to facilitate construction packaging, some low risk pipe segments were added to the long-term project.
(3) Numbers shown are for area of concern in Contract IV only. There are no required projects for the area of concern in Contract V.

The Short-Term Project was given a goal by SAWPA of implementation and completion within the next three years following the start of Fiscal Year 2013/2014. The 3-year timeframe was developed because the project was deemed an emergency due the observed defects in the existing Brine Line and the critical nature of the "High Risk" areas to be rehabilitated as part of this project. The identified 3-year timeframe is a realistic yet aggressive timeframe to implement the project. The Long-Term Project was given a target implementation and completion date of within 4 to 10 years of the start of Fiscal Year 2013/2014. This timeframe was developed because this project was deemed less critical because of the lessened identified risk of the nature of the defects and the areas in which they were located.

It is important to note that although the Short-Term Project was developed to rehabilitate High Risk sections of existing Brine line, some medium and low risk pipe segments were incorporated into the Short-Term Rehabilitation Project for purposes of construction packaging and staging. This occurred in the following instances:

- If short section of medium or low risk pipe was located between two high risk pipes, this short section was included in the Short-Term Project.
- If a very short segment of high risk pipe was calculated to be rehabilitated, length was added to the lining section with medium and low risk pipe segments. Since SAWPA would already paying for the bypass and project set-up in this location, it made sense to add length to the lined section by incorporating adjacent medium and low risk pipe segments.
- Pipe segments that have a high likelihood of failure but a low consequence of failure were added to the short-term rehabilitation project.

Figure 11 shows the project drivers for each high risk segment of pipe. Project drivers were those factors from either the Likelihood Factors or the Consequence Factors as outlined above that were the lead contributor to making that particular segment high risk. See Appendix C for a more detailed breakdown of Risk Assessment Results. See Figures 12 through 16 for maps of short and long-term recommended projects for Contracts II and III and the area of concern in Contract IV as well as a combined total recommended project map. No projects were identified in Contract V.

Figure 11. Reach V High Risk Segment Project Drivers

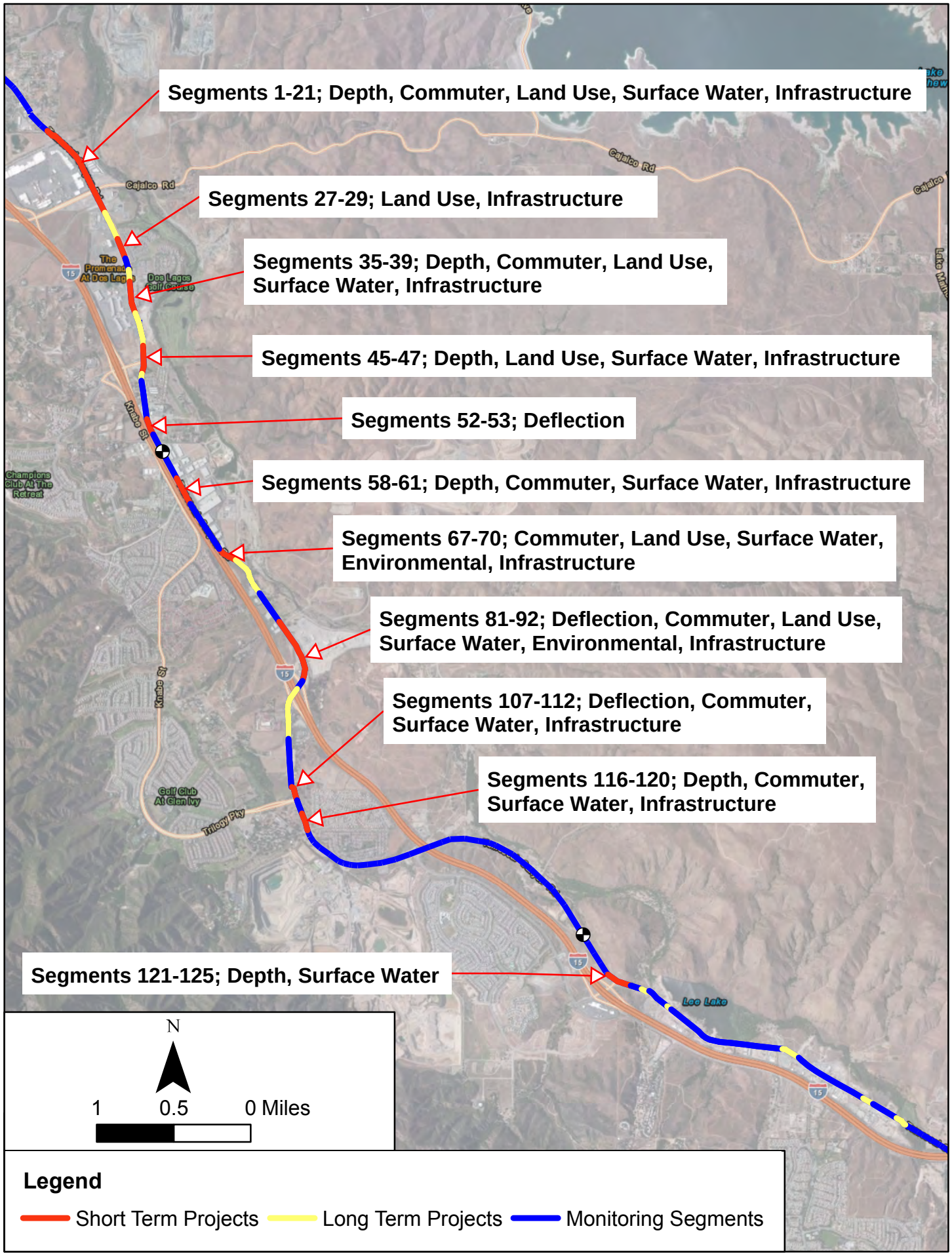

SAWPA

RMC Water and Environment

N

2,000 1,000 0 Feet

Legend

- Main Gate Valves
- Other Contracts
- Key Areas
- Short Term (CIPP Lining)
- No Improvements

Figure 12

Contracts II/III
Basis for Recommended
Short-Term Project

SAWPA

RMC Water and Environment

N

2,000 1,000 0 Feet

Legend

- Main Gate Valves
- Other Contracts
- Key Areas
- Long Term (CIPP Lining)
- No Improvements

Figure 13

Contracts II/III

Basis for Long-Term

(3-10 years) Project

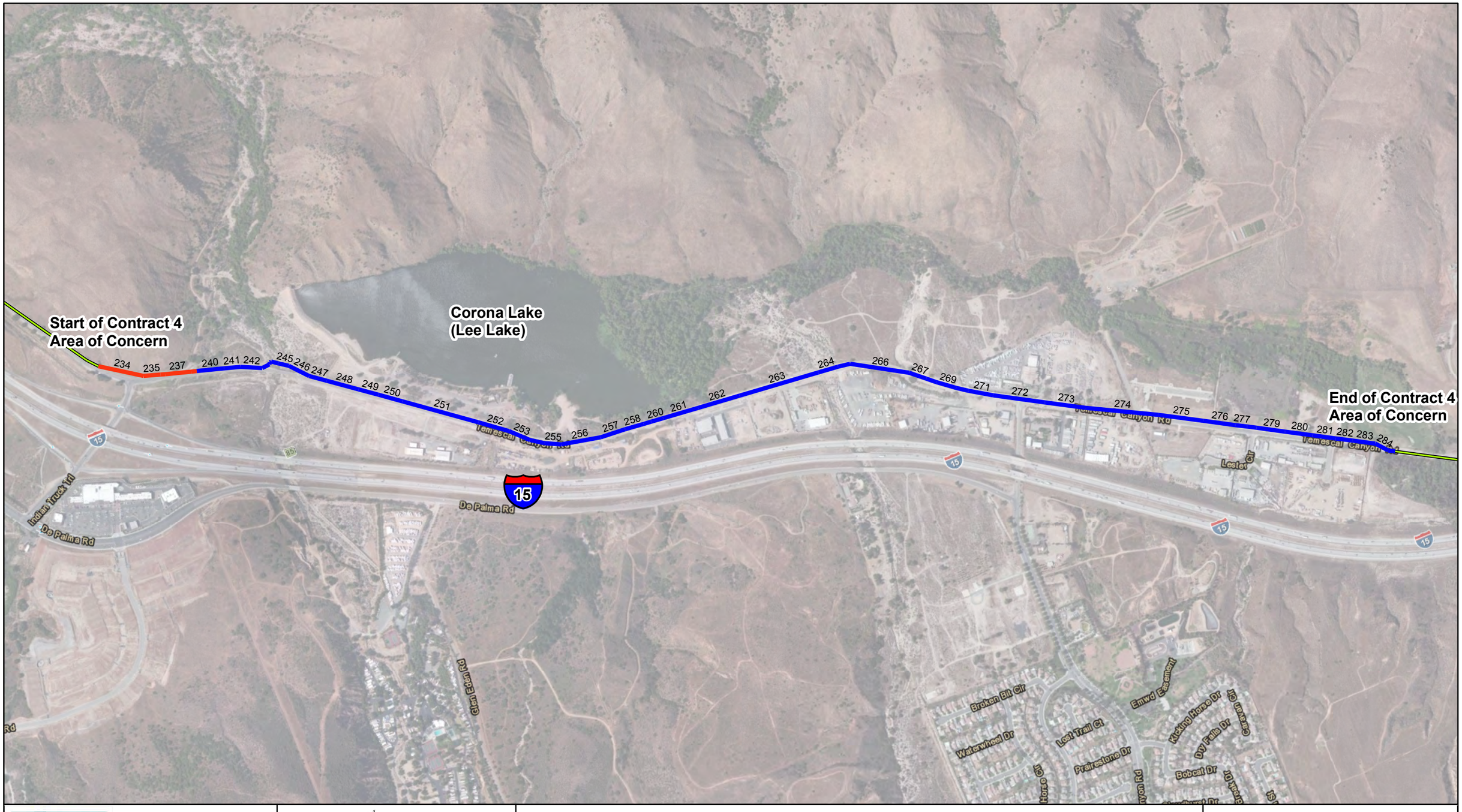

SAWPA

RMC Water and Environment

N

1,000 500 0 Feet

Legend

Outside Scope

Short Term (CIPP Lining)

No Improvements

Figure 14

Contract IV

Basis for Short-Term Project

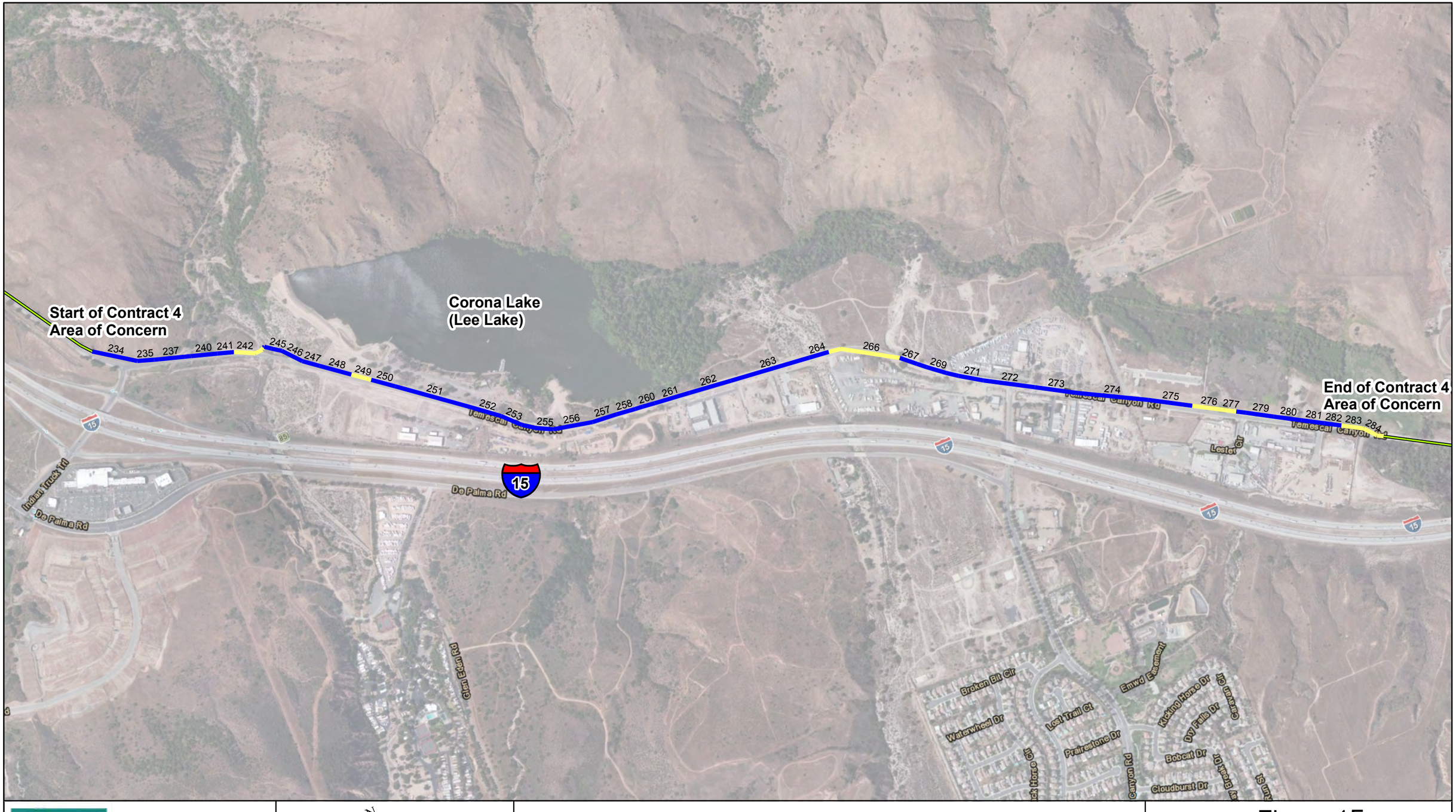

SAWPA

RMC Water and Environment

N

1,000 500 0 Feet

Legend

- Outside Scope
- Long Term (CIPP Lining)
- No Improvements

Figure 15

Contract IV

Basis for Long-Term

(3-10 years) Project

SAWPA

RMC Water and Environment

N

3,000 1,500 0 Feet

Legend

- Main Gate Valves
- Other Contracts
- Key Areas
- Short Term (CIPP Lining)
- Long Term (CIPP Lining)
- No Improvements

Figure 16

Combined Short and Long-Term Projects for Reach V Contracts II/III and Area of Concern in Contract IV

5 Rehabilitation Options Evaluated for Short and Long-Term Projects

Once the Short and Long-term Projects were identified through Risk Analysis as described in Section 4, the next step was to evaluate rehabilitation and/or replacement options for each of the projects. Five options were evaluated for use on the projects. These options were:

- Pressure Grouting
- Tight Fit Lining
- Pipe Bursting
- Open Cut Replacement
- Pressure Cured-In-Place Pipe Lining (CIPP)

The following is a summary of each of the options evaluated. For those options not deemed viable for use on the Brine Line, a general description and discussion of why the technology was rejected for use on these projects are presented. For those options deemed viable for these projects, the option summaries include a general discussion of the technology and anticipated construction, traffic, and hydraulic impacts.

5.1 Pressure Grouting

Pressure grouting is a grouting technique that transforms granular soils into sandstone-like masses by permeation with a low viscosity grout. The soils best suited for this technique are sands with low fines content. Typically, a sleeve port pipe is first grouted into a predrilled hole. The grout is injected under pressure through the ports located along the length of the pipe. The grout permeates the soil around the existing pipe and solidifies it into a sandstone-like mass. The grouted soil has increased strength and stiffness, and reduced permeability.

Pressure grouting is usually used to underpin existing foundations, create excavation support walls, create water cutoff walls and stabilize soils for tunneling. It is rarely used to stabilize the soil around an existing pipe.

Pressure grouting is not considered a viable option for the Brine Line for several reasons including:

1. Pressurized grout in the pipe zone has the potential to damage the existing pipeline. The existing Brine Line is very thin walled DR 51 PVC pipe that would be highly susceptible to damage from installation of the pressure grout.
2. It is very difficult to accurately estimate the volume of pressure grout required to stabilize poorly consolidated soils around an existing pipe. Grouting volumes are estimated based on existing geotechnical data for the pipe zone and then grouting data is monitored and analyzed during injection operations. Actual grout volumes can be 40% to 60% higher than was originally estimated based on existing geotechnical information. If the grouting protocol is not modified for the actual ground conditions during grout injection, it is unlikely that satisfactory ground treatment will be achieved.
3. The large volume of grout that would be required to stabilize over 21,000 feet of 24-inch pipe would be costly without a guarantee of success.

5.2 Tight Fit HDPE Lining

Tight fit liners (also known as close-fit liners) are a liner made from High Density Polyethylene (HDPE) whose outside diameter is slightly larger than the inside diameter of the host pipe. The diameter of the HDPE liner is temporarily reduced prior to insertion into the host pipe by means of elastic deformation. This is achieved through symmetric pipe compression, symmetrical pipe elongation, or folding and reforming. Once inserted, the liner pipe ends are closed and the liner is pressurized with water or air so that the liner re-expands to produce a close-fitting liner. Tight fit liners can be semi-structural or structural solutions and are for pressure pipe applications.

This rehabilitation solution is not appropriate for the Brine Line because this lining system is specifically used for sustained steady pressure applications. As such, it relies on a constant internal pressure of the pipe to keep the liner fully secured against the inside wall of the host pipe. The Brine Line fluctuates in pressure on a diurnal pattern. Because Reach V of the Brine Line changes from gravity to pressure throughout its alignment and the pressure fluctuates as users go off-line for temporary shut-downs, there is a possibility that the pressure liner could buckle or fold in the host pipe in the gravity portions of the alignment where there is not sufficient internal pressure to keep the tight fit liner compressed against the host pipe.

5.3 Pipe Bursting

Pipe bursting is the process by which a bursting head breaks apart an existing pipe, creates a temporary void in the subsurface, and pulls in a new pipe behind it. A form of Static Pipe Bursting called Pipe Splitting would be the only type of pipe bursting technology that is appropriate for replacement of a PVC pipe. This is because traditional pipe bursting breaks apart an existing brittle pipe prior to pulling in a new pipe behind it. The existing PVC Brine Line pipe is not brittle and, therefore, would have to be split. Pipe splitting is the process of using a static pipe bursting head coupled with a special splitting tool to cut or split the existing non-brittle pipe, push it up into the surrounding subsurface, and pull in a new pipe behind it.

The replacement pipe pulled in behind the pipe bursting head can be the same size as the existing pipe or up to three diameters larger. Pipe bursting is typically used for rehabilitation when more capacity is needed in a system. For this project, we would expect that the replacement pipe would be the same inside diameter as the existing pipe and would be made of HDPE. When using pipe bursting for a project of this size and depth, access pits are required approximately every 500 feet. Access pits would be approximately 5 feet wide by 50 feet long. Bypass pumping would be required for this option. The cost of pipe splitting is similar to CIPP Lining. See Section 5.5.

Pipe bursting is not considered a viable option for rehabilitating the Brine Line. This is because of the presence of poorly consolidated soils in the trench zone surrounding the existing pipe. The pipe bursting head is a very large and very heavy piece of equipment that takes the path of least resistance. A typical static pipe bursting head used to burst a 24-inch pipe could be 32 inches in diameter, 14.5 feet long, and weigh over 25,000 pounds. If this tool were introduced into poorly consolidated soils, the head would probably cause the surrounding soils to consolidate and settle as it was being pulled through the existing pipe. This could result in numerous and severe dips and sags in the new pipe which could impede system hydraulics and operations.

5.4 Open Cut Replacement

5.4.1 General Description

The open cut replacement method involves excavation and removal of the existing pipeline, and replacement with a new pipeline via direct bury. To avoid or minimize the need for bypass pumping, a new pipeline parallel a minimum of 5 feet from the existing pipeline could be constructed with

connections made at the beginning and end of each section of the alignment that required replacement. By using this method, the existing pipeline could be kept in service while the new pipeline was constructed. Once the new pipeline construction is completed, the outage duration would be minimal (probably less than 24 hours) while the flow is diverted from the existing pipeline to the new pipeline. Open cut replacement is considered a viable option for rehabilitation of most of Reach V of the Brine Line, however it may be very costly in certain locations due factors such as traffic impacts, proximity to other utilities, depth of pipe, etc as discussed in the following sections.

5.4.2 Construction Impacts

Site Layout and Traffic Impacts

The traffic impacts associated with construction of a parallel pipeline for both the Short and Long-term Projects could be significant. In order to install a new parallel 24-inch diameter replacement pipeline, a trench approximately 4 feet wide would need to be excavated. With the presence of an excavator, dump truck, and other ancillary excavation and construction equipment, the Contractor will generally take up a minimum of one lane of traffic within the roadways. The area of disturbance and general disruption to traffic will increase in areas where the pipe is closer to the center of the road, in a median, or where the pipe crosses other arterials or is near Caltrans access points. Much of the existing roadway for Reach V is only a two lane road, which will require stoppage of traffic at all times of the day when open cut construction activity is occurring.

Impacts to Existing Utilities

Temescal Canyon Road is a relatively congested utility corridor containing large diameter storm drains, water lines, high pressure gas lines, sewer, telephone, cable, fiber optic, electrical, etc. Finding a clear corridor to install the new parallel Brine Line would be difficult. In order to lay out a preliminary path for a parallel Brine Line, up-to-date as-built information has been requested from utilities in the area. Because of the fast-track nature of this Study, as of the date of printing of this draft report we have received very limited utility information. See Appendix A. However, based on information we have from the original Brine Line construction drawings, it appears as though SAWPA would have to relocate one or more utilities in order to establish a clear path to install a parallel Brine Line along most of the alignment. In addition, installing a new Brine Line in proximity to the existing Brine Line and large diameter water main would increase the risk associated with accidently hitting or damaging these existing pipelines during construction.

Productivity

Generally, approximately 200 feet of pipe can be installed per day via open cut. However, because of the nature and extent of existing utilities, production installation of this pipeline would probably be more in the 50-100 foot per day range. Because this pipeline is relative deep with an average depth of cover of 11 feet, shoring design and installation will likely be required resulting in added cost. According to past geotechnical reports completed in the area, the groundwater table is deep in this area and dewatering would generally not be required along most of the alignment. Dewatering may be required where the pipeline crosses water bodies and in certain areas of Reach V, Contract IV.

Bypass Pumping Requirements

Because a parallel pipeline would be installed, the need for bypass pumping is significantly reduced and may not be needed. .

5.4.3 Hydraulic Impacts

Hydraulic impacts associated with the installation of a parallel pipeline via open cut would be zero as the existing pipeline would be replaced with the same size pipe with the same capacity.

5.5 Pressure Cured-In-Place Pipe Lining (CIPP)

5.5.1 General Description

Pressure CIPP (often referred to as Reinforced Pressure Pipe Liner (RPP)) is a lining system in which a thin flexible tube of polymer or glass fiber fabric is impregnated with thermoset resin and expanded by means of fluid pressure into position on the inner wall of a host pipe before curing the resin to harden the material. The uncured material may be installed by winch or inverted by water or air pressure. CIPP lining can be designed as either semi-structural or fully structural. Bypass pumping would likely be required with this rehabilitation option.

In the case of rehabilitation of the Brine Line, the CIPP liner would be designed as fully structural and its materials of construction would either be a glass reinforced or polyester and fiberglass composite tube with Vinyl Esther or Epoxy Resin (depending on CIPP which manufacturer is used). Because of the size and relative stiffness of the liner and, therefore, the pressure required to invert the liner into the host pipe, the CIPP liner for the Brine Line would most likely be installed via water pressure and cured with hot water. Steam cure is not considered viable because of the size , length and relative thickness of the structural liner. Based on the depth of the pipe, maximum operating pressure of the pipe, geotechnical conditions in the pipe zone, and measured ovality of the pipe it is estimated that the liner thickness will be approximately 6/10 of an inch. For further discussion on pipe ovality, liner thickness, and liner thickness effects on system hydraulics, see the discussion in Section 5.5.3 Hydraulic Impacts.

5.5.2 Construction Impacts

Site Layout and Traffic Impacts

For a 24-inch pipe with an estimated liner thickness of 6/10 of an inch, a pressure CIPP liner can be installed a maximum of approximately 750 feet per installation set up. To provide for future ease of access for maintenance and inspection, maintenance access structures (MAS) with isolation valves are assumed to be installed approximately every 1,500 feet along Reach V, Contracts II, III, and areas of concern in Contract IV of the existing Brine Line. A more detailed discussion of MAS and isolation valve assumptions is included in Section 6. A total of 26 MAS are required.

Due to the pressure liner stiffness, pressure CIPP cannot bend enough to be installed through access tees in a MAS. The weight of the resin impregnated liner coupled with the required bend at the tee does not make installation of pressure CIPP practical in these locations. Therefore, access pits for liner installation will be needed at approximately the halfway point between each MAS location. The liner can be installed from these access pits in both directions to terminate at each MAS location. Based on the estimated location of new MAS along Contracts II, III, and areas of concern in Contract IV as well as the location of segments of the Brine Line requiring rehabilitation, it is estimate that approximately 18 liner installation access pits will be required for the Short-Term Project and 21 liner installation access pits are needed for the Long-Term Project. Each liner installation access pit is assumed to be approximately 12 feet long X 6 feet wide. See Figure 17.

At the termination of the CIPP lining (at both the liner installation access pit and the MAS) the contractor will have to install end seals. End seals are flush fittings that compress and bear against the inside of the host pit at the interface between the CIPP liner and the host pipe. In order to ensure that the end seal seats properly, a steel, ductile iron, or stainless steel spool piece needs to be installed at the termination of each end of the liner. This would also ensure that the end seal has a round pipe on which to seal as the existing PVC pipe currently has issues with ovality and the location of the out of round locations are currently unknown.

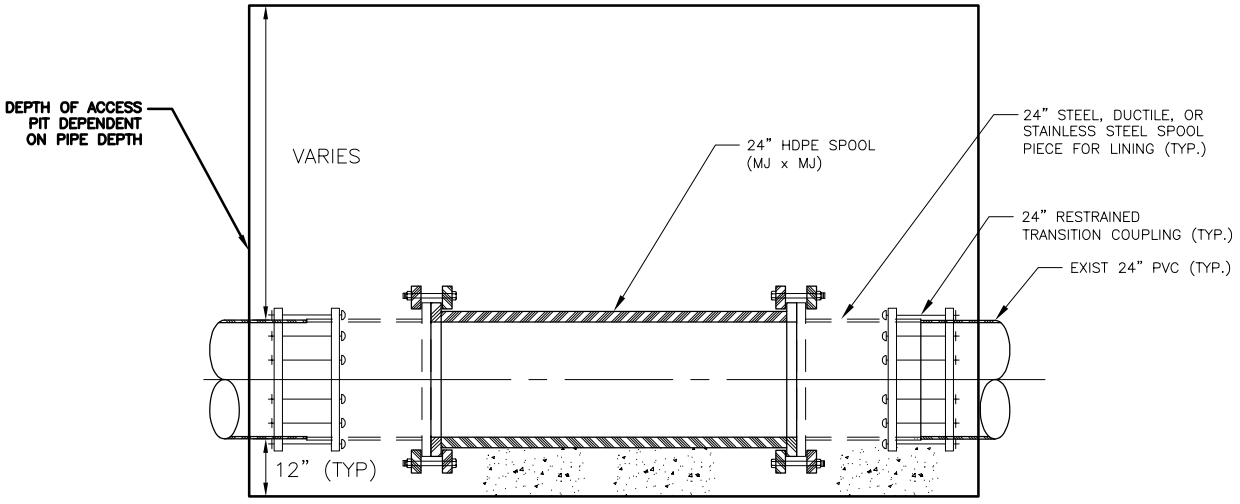

PROFILE VIEW

SCALE: NTS

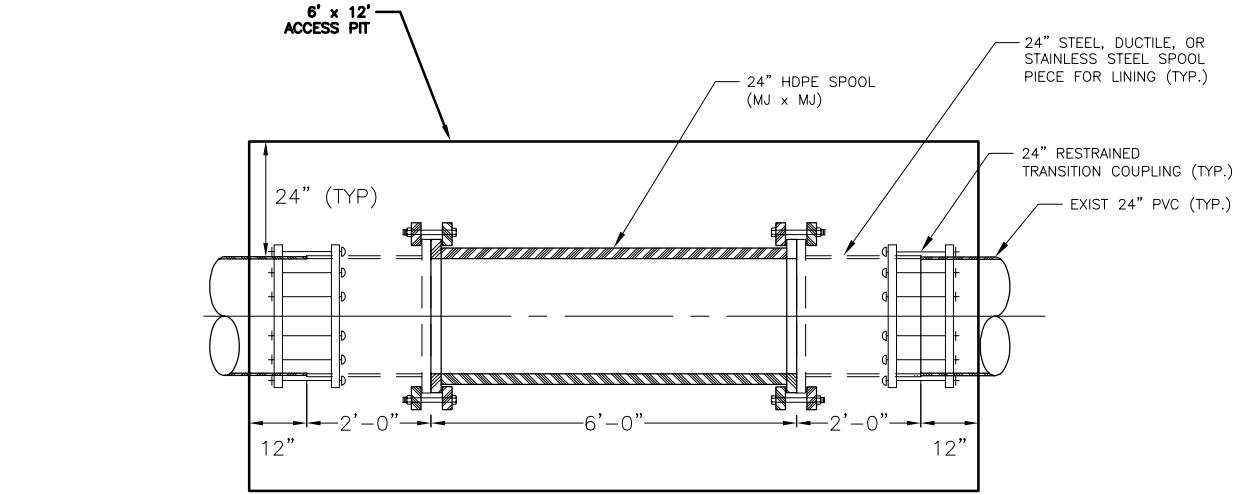

PLAN VIEW

SCALE: NTS

RMC Water & Environment

Figure 17. Access Pit for CIPP Liner Installation

FILENAME: Vault_Layout 4-22-13 09:44:16am byoung II XREFS: 8-5X11 FIG BORD IX<--

Last Saved By: byoung 4-22-13 09:44:10am

At each liner installation access pit location during initial liner installation, the contractor will need a vacuum truck for cleaning, a hydraulic tower for liner inversion, a water truck, and a refrigerated liner truck. The liner will most likely be impregnated with resin or "wet out" off-site and trucked on to the job site for installation. The site footprint required for liner installation will be approximately 150 feet X 15 feet. This can be accomplished within one lane of traffic. Where an access pit must be excavated in a narrow 2-lane section of Temescal Canyon Road, flaggers would be employed.

Once the liner is installed, it then needs to be cured for a period of 8 to 12 hours. During curing, the site set-up will switch to a boiler truck and support vehicles which will require a smaller 70 foot X 15 foot site footprint. Again, this can be accomplished within one lane of traffic. Where an access pit must be excavated in a narrow 2-lane section of Temescal Canyon Road, flaggers will be employed. Once curing begins, it cannot be suspended until completed. Curing could occur during evening hours as permitted by local jurisdictional agencies.

Impacts to Existing Utilities

As stated previously, Temescal Canyon Road is a relatively congested utility corridor. Liner installation access pits will need to be placed in clear areas where limited utility conflicts exist. Many of the existing utilities along Temescal Canyon Road are small diameter and/or shallow and could be protected in place within the access pit. There will be a balance required during the design process between calling for the installation of an access pit at a proper distance from the existing MAS (as installed as part of the Near-Term Project as defined in Section 7) and finding a location within Temescal Canyon Road where it would be appropriate to excavate a pit amongst the existing utilities.

Productivity

The driving factors for construction implementation and productivity of Pressure CIPP Lining are:

- Maximum lining distance between access pits;
- Lining thickness; and
- Curing time.

As mentioned above, the maximum lining length for structural Pressure CIPP Lining in this size pipe with a varying vertical alignment is approximately 750 feet. In addition, each lined pipe segment will take approximately 8 to 12 hours to cure. A complete discussion on liner thickness is presented in Section 5.5.3 below.

Based on the anticipated liner thickness, curing time, and a maximum lining length of 750 feet with a pit installed equidistant from the newly installed MAS, Table 6 shows a breakdown of installation steps and anticipated time to complete one 1,500 segment of pipe lining between two MAS. Please note that this would generally include the excavation of one access pit from which the pipe can be lined in either direction to the existing MAS. Those tasks in which bypass pumping between the two MAS would be required are noted.

Table 6. Pressure CIPP Productivity

Task Description	Estimated Duration	Bypass Pumping or Storage Required?
Set Up Traffic Control and Excavate Access Pit	2 Days	No
Set Up Lining Operation (Construct Tower, Bring in Lining Equipment, etc.)	1 Day	No
Cut Into Existing Pipe	1 Day	Yes
Pipe Cleaning and Prep	2 Days	Yes
CCTV Inspection	1 Day	Yes
Inversion, Curing, Cool Down, Drain Pipe to Downstream, Cut Liner Ends, Install End Seals	3 Days	Yes
Install Spool Piece	1 Day	Yes
Backfill Excavation	2 Days	No
Surface Restoration	1 Day	No
	14 days total	

It will require an estimated total of 8 working days of full bypass or storage of brine flow in order to install pressure CIPP lining between two existing MASs spaced approximately 1,500 feet apart. The entire lining operation between the two MAS will take an estimated 14 working days.

Bypass Pumping or Storage Requirements

Bypass pumping or brine storage would be required when using pressure CIPP to rehabilitate the Brine Line. When considering bypass pumping, it is anticipated that one bypass set-up would be installed for each 1,500 foot length of Brine Line located between existing MAS. Once lining of this pipe segment was completed, the bypass operation would move to the next 1,500 foot length between existing MASs that needed lining. This would continue until the project was completed. For further information and discussion regarding bypass pumping, see Section 8 of this report.

5.5.3 Hydraulic Impacts

Pressure CIPP lining has some thickness associated with it. Because of that, lining the existing Brine Line using this rehabilitation alternative will have some hydraulic impact on the existing system. The following is a discussion regarding impacts of the liner to the existing system and the presentation of hydraulic modeling results.

Liner Thickness Discussion

The existing Brine Line is 24-inch DR 51 PVC. As mentioned previously, pressure CIPP liner thickness is based on the existing site and pipe conditions such as depth of the pipe, maximum operating pressure of the pipe, geotechnical conditions in the pipe zone, and measured and assumed ovality of the pipe. The following values as presented in Table 7 were assumed in calculating the estimated pressure CIPP liner thickness for the Brine Line per ASTM F1216:

Table 7. Values Used in Calculating Pressure CIPP Lining Thickness

Parameter	Assumed Value(1)
Liner Condition	Fully Deteriorated
Factor of Safety	2.0
Pipe Diameter	24 inches
Modulus of Soil Reaction(3)	400 psi
Soil Density	120 pcf
Initial Flexural Modulus of Elasticity	250,000 psi
Flexural Strength	4,500 psi
Live Load	Highway, HS-20
Height of Soil Above Pipe Crown	11 feet
Height of Groundwater Above Pipe	-2 feet
Ovality(2)	7.0%

(1) Assumed values used for this exercise were based on available information and were chosen to be conservative.
(2) See Section 5.5.3, Ovality for a description on how this value was chosen.
(3) A low value for Modulus of Soil Reaction was used to account for anticipated poor soil consolidation in pipe trench zone as was measured in the 11 test pits.

Based on the above values, it is estimated that the liner thickness will be approximately 6/10 of an inch or 5/8". That would translate to an effective inside diameter of the Brine Line of 22.75 inches. That would be a 5.2 percent loss in cross-sectional area.

Early on in the analysis and prior to the development of a more refined liner thickness design, modeling runs were completed based on a liner thickness of ¾". That would translate to an effective inside diameter of 22.5 inches. That is a 6.3 percent loss in cross-sectional area. So, hydraulic modeling results as presented in this report are conservative by an order of magnitude of approximately 1.1% loss of cross-sectional area.

Ovality

Because CIPP uses the existing pipe as a form and conforms against the inside of the pipe, a key parameter in determining CIPP thickness is the ovality of the pipe. There are two ways of handling the issue of ovality when determining the anticipated thickness of the pressure CIPP liner for the Brine Line. These two options are:

1. Assume the entire pipeline to be lined has an ovality of 7% which was the worst case that was measured in the 11 test pits dug as part of the initial investigation of the Brine Line. See Table 2.
2. Spend time and money completing sonar inspection to determine the actual measured ovality of the pipe along its entire length. Using these actual values, calculate the required liner thickness reach by reach.

Option 1: Assume 7% Ovality for the Entire Brine Line

Per ASTM F1216,there is an automatic 2.0 safety factor built into the equation used to calculate the thickness of a pressure CIPP liner. After speaking with several different pressure CIPP materials manufacturers regarding pipe ovality, a sensitivity analysis was performed in which the ovality was changed from 3% to 7% and again to 10% while keeping all of the other design parameters the same. Each time the ovality changed by 2 percentage points, the liner thickness changed 2 millimeters or .01 inch. When considering using a 5/8 inch thick liner for CIPP rehabilitation, a change in liner thickness of .015 inch due to change in ovality from 7% to 10% translates to a 2.5 percent difference in liner thickness. This difference is negligible and it can be assumed that the 5/8" thick liner (designed for an ovality of 7%) would be sufficient in the case of installing that liner in a pipe that has 10% ovality.

The costs associated with increasing or decreasing a liner thickness by 2.5% are minimal. So, if SAWPA were to choose to design each reach based on actual measured ovality, the material costs savings would be minimal. Material costs make up about 40% of an overall lining cost.

In addition, if SAWPA chose to design their liner thickness at 7% ovality and the actual ovality in a section of pipe turned out to be 10%, then the factor of safety for the liner installed would be 1.8 versus the 2.0 it was originally designed at. This is still an acceptable factor of safety. Another important point when considering ovality versus liner thickness is the presence of isolated deflections across short sections within a longer pressure CIPP lining run. For example, within a 750 length of pipe, there exist sections of 3% and 7% ovality with a very short section of 10% ovality. CIPP lining, once cured, forms a continuous structural beam and can span short areas of high deflection. So, in this case, the liner would be designed based on 7% ovality and the manufacturer would rely on the structural properties of the liner to span the short section of 10% ovality in the existing alignment.

Option 2: Complete a Sonar Inspection to Measure the Actual Ovality in the Pipe Prior to Lining

A second option in handling the ovality question when designing a pressure CIPP lining is to directly measure the ovality in the existing pipe prior to manufacturing the lining. This could be accomplished with the use of Sonar Inspection after the MAS and isolation valves were installed on the Brine Line but prior to the start of the Brine Line rehabilitation project.

The inspection would most likely occur from MAS to MAS. In order for the inspection to occur, the pipeline needs to be completely full of water. So, in areas where the pipe is already flowing full, this would mean simply dropping the inspection equipment into the access tee and intercepting it in the downstream MAS. However, in areas where the pipe is not flowing full, the downstream isolation valve would need to be shut and the pipe segment allowed to fill with water prior to the inspection. This would require careful coordination between the Sonar Inspection contractor, SAWPA, and EMWD and has some risk associated with it.

When taking into account pipe surcharge requirements and the manpower and time associated with prepping the existing pipeline, productivity of inspection would most likely be two 1,500 foot runs per day or 3,000 feet per day. The average daily rate for sonar inspection is in the range of $4,000 to $9,000 per day. Reach V, Contracts II and III and areas of concern within Contracts IV and V of the Brine Line are a total length of 40,800 feet. Assuming 3,000 foot per day production at a daily rate of $7,500, the total cost of Sonar Inspection would be approximately $100,000 plus SAWPA and EMWD labor. This does not include the risk associated with completing this type of inspection.

Recommendation:

Because of the cost and risk associated with Sonar Inspection coupled with the minimal cost and risk associated with making an assumption regarding the ovality of the pipe, it is recommended to forego the

use of Sonar Inspection and proceed with the pressure CIPP liner thickness design assuming a 7% ovality in the existing Brine Line.

Hydraulic Modeling

RMC modeled the impact of pressure CIPP lining for both the Short-Term and Long-Term Brine Line Rehabilitation Projects as outlined in Section 4 and again in Section 7 of this report. As part of the modeling exercise, impacts to hydraulic grade line, pressure, and velocity were evaluated for both existing flows (3.25 MGD) and anticipated future flows (11 MGD) for both Reach V, Contracts II and III as well as areas on concern in Contract IV. No rehabilitation will be required in the area of concern in Reach V, Contract V.

The results of the modeling are presented in Figures 18 through 25 below.

Modeling results indicate that the pressure CIPP liner has very little effect on the hydraulic grade line, pressure and velocity in the system in both the short and long term. In fact, the velocities in the system actually decreased slightly as a result of lining. Pressure increased a total of .3% from the existing system to Short and Long-Term CIPP lining projects combined. Table 8 presents a summary of pressure CIPP lining impacts to Reach V, Contracts II and III and the area of concern in Contract IV of the Brine Line.

Table 8. Summary of CIPP Pressure Lining Impacts on the Brine Line

Project Description and Hydraulic Characteristic Measured	Reach V, Contracts II and III and Areas of Concern Contract IV	
	3.25 MGD	11 MGD
EXISTING SYSTEM – NO LINING IMPROVEMENTS		
HGL at Low Point	902 ft.	909 ft.
Max Pressure	51.0 psi	55.8 psi
Max Velocity	12.8 ft/s	16 ft/s
SHORT-TERM CIPP LINING PROJECT ONLY		
HGL at Low Point	902 ft.	909 ft.
Max Pressure	51.0 psi	56.6 psi
Max Velocity	12.6 ft/s	15.8 ft/s
SHORT AND LONG-TERM CIPP LINING PROJECT COMBINED		
HGL at Low Point	902 ft.	909 ft.
Max Pressure	51.1 psi	56.8 psi
Max Velocity	12.6 ft/s	14.4 ft/s

End of
Area of Concern
Contract 4

Start of
Area of Concern
Contract 4

Lee Lake Water
District Facility

Start of
Contracts 2/3

Dos Lagos

End of
Contracts 2/3

83 93 95 97 99 102 106 109 113 116 117 121 125 127 132 133 134 137 138 140 601 603 604 145 148 151 155 156 157 159 165 170 176 179 181 184 191

234 240 248 251 256 262 263 266 269 272 274 275 279 283

15

SAWPA

RMC
Water and Environment

N

3,000 1,500 0 Feet

Legend

- Main Gate Valves
- Other Contracts
- Key Areas
- 0 - 5 psi
- 5 - 10 psi
- 10 - 25 psi
- 25 - 50 psi
- > 50 psi

Figure 18

Short-Term Project with 3.25 MGD
Pressures for Reach V Contracts II/III
and Area of Concern in Contract IV

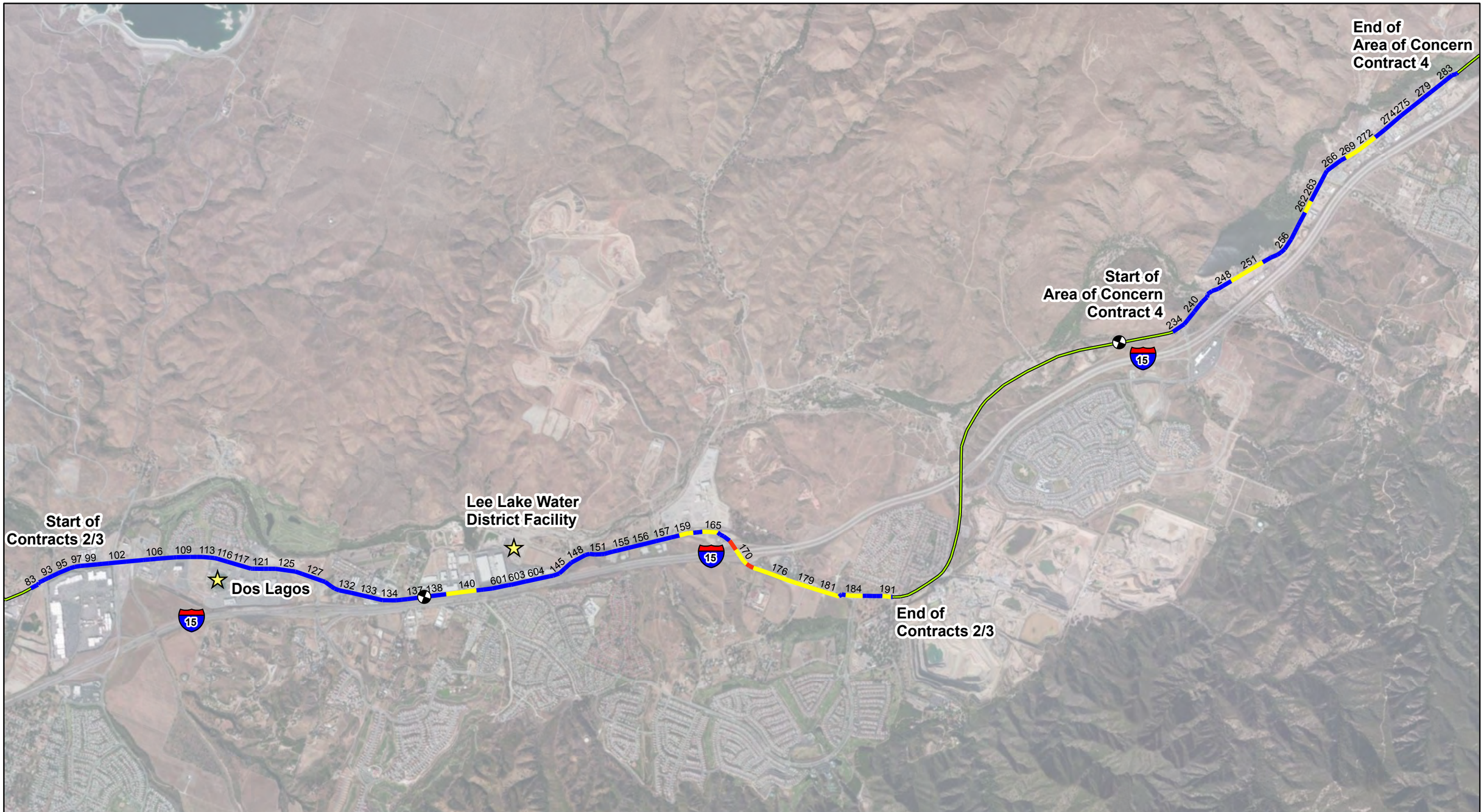

Figure 19

Short-Term Project with 3.25 MGD
Velocities for Reach V Contracts II/III
and Area of Concern in Contract IV

End of
Area of Concern
Contract 4

Start of
Area of Concern
Contract 4

Start of
Contracts 2/3

Dos Lagos

Lee Lake Water
District Facility

End of
Contracts 2/3

83 93 95 97 99 102 106 109 113 116 117 121 125 127 132 133 134 137 138 140 601 603 604 145 148 151 155 156 157 159 165 170 176 179 181 184 191

234 240 248 251 256 262 263 266 269 272 274 275 279 283

15

SAWPA

RMC
Water and Environment

N

3,000 1,500 0 Feet

Legend

- Main Gate Valves
- Other Contracts
- Key Areas
- 0 - 5 psi
- 5 - 10 psi
- 10 - 25 psi
- 25 - 50 psi
- > 50 psi

Figure 20

Short-Term Project with 11 MGD
Pressures for Reach V Contracts II/III
and Area of Concern in Contract IV

End of
Area of Concern
Contract 4

Start of
Area of Concern
Contract 4

Start of
Contracts 2/3

Dos Lagos

Lee Lake Water
District Facility

End of
Contracts 2/3

83 93 95 97 99 102 106 109 113 116 117 121 125 127 132 133 134 137 138 140 601 603 604 145 148 151 155 156 157 159 165 170 176 179 181 184 191

234 240 248 251 256 262 263 266 269 272 274 275 279 283

15

SAWPA

RMC
Water and Environment

N

3,000 1,500 0 Feet

Legend

- Main Gate Valves
- Other Contracts
- Key Areas
- 0 - 5 psi
- 5 - 10 psi
- 10 - 25 psi
- 25 - 50 psi
- > 50 psi

Figure 21

Short-Term Project with 11 MGD
Pressures for Reach V Contracts II/III
and Area of Concern in Contract IV

SAWPA

RMC Water and Environment

N

3,000 1,500 0 Feet

Legend

- Main Gate Valves
- Other Contracts
- Key Areas
- 0 - 5 psi
- 5 - 10 psi
- 10 - 25 psi
- 25 - 50 psi
- > 50 psi

Figure 22

Long-Term Project with 3.25 MGD Pressures for Reach V Contracts II/III and Area of Concern in Contract IV

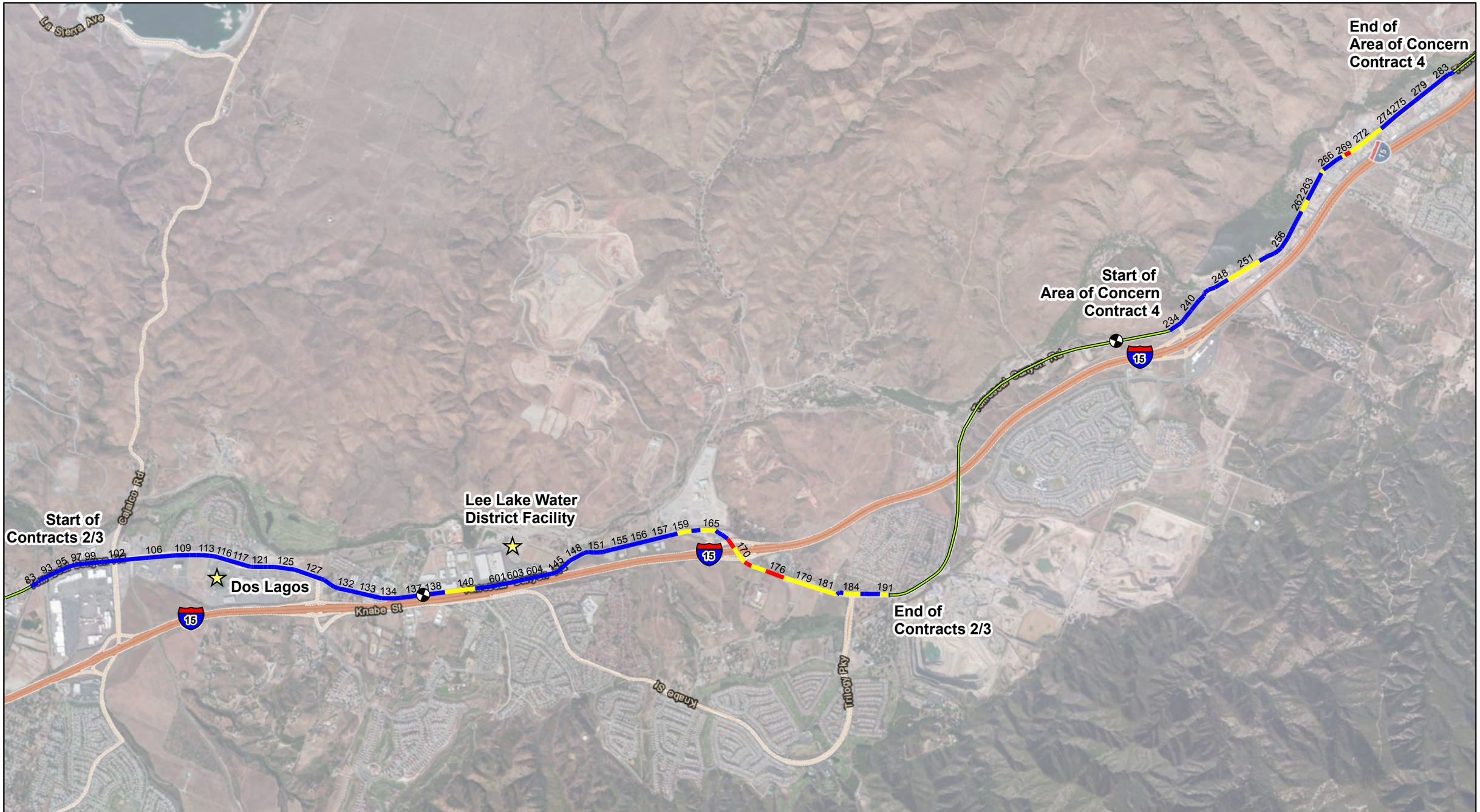

SAWPA

RMC Water and Environment

N

3,000 1,500 0 Feet

Legend

- Main Gate Valves
- Other Contracts
- Key Areas
- 0 - 5 fps
- 5 - 10 fps
- > 10 fps

Figure 23

Long-Term Project with 3.25 MGD Velocities for Reach V Contracts II/III and Area of Concern in Contract IV

SAWPA

RMC Water and Environment

Figure 24

Long-Term Project with 11 MGD Pressures for Reach V Contracts II/III and Area of Concern in Contract IV

SAWPA

RMC Water and Environment

N

3,000 1,500 0 Feet

Legend

- Main Gate Valves
- Other Contracts
- Key Areas
- 0 - 5 fps
- 5 - 10 fps
- > 10 fps

Figure 25

Long-Term Project with 11 MGD
Velocities for Reach V Contracts II/III
and Area of Concern in Contract IV

6 Maintenance Access Structures, Isolation Valves, and Air/Vacuum Valves

6.1 Maintenance Access Structures

Maintenance access structures (MAS) are assumed to be installed along Reach V, Contracts II, III, and the area of concern in Contract IV of the Brine Line alignment approximately every 1,500 feet for a total distance of 38,600 feet. A total of 26 MAS will be needed. The structures will be constructed as a separate stand-alone project in conjunction with the installation of isolation valves (see Section 6.2).

The purpose of the MAS is to provide for future access for cleaning and CCTV inspection. In addition, the structures could be used for pressure CIPP lining termination and end seal installation. The basis for the cost estimates for the MAS structures is the installation of an approximately 72" diameter precast manhole structure. To ensure adequate access for future inspection and lining operations, a 36-inch access tee will be installed within the structure. In addition, 2 foot long steel, ductile iron, or stainless steel spool pieces will be installed on either side of the access tee. The spool pieces are required at the termination of the CIPP lining (at both the insertion pit and the MAS) so that the contractor can install end seals. As already discussed in Section 5.5.2, end seals are flush fittings that compress and bear against the inside of the host pit at the interface between the CIPP liner and the host pipe. In order to ensure that the end seal seats properly, a steel, ductile iron, or stainless steel spool piece needs to be installed at the termination of each end of the liner. This will also ensure that the end seal has a round pipe on which to seal as the existing PVC pipe currently has issues with ovality and the location of the out of round locations are currently unknown. An isolation valve and access tee for future bypass pumping will also be installed in adjacent smaller structures. See Figure 26.

6.2 Isolation Valves

Isolation valves are recommended for installation adjacent to and just upstream of each MAS structure on Reach V, Contracts II, III, and the area of concern in Contract IV of the Brine Line for three reasons:

1. Provide a means of stopping flow upstream of an overflow, break, or other issue with the existing pipe. This will help to contain system issues and prevent large brine spills in the future.
2. Significantly reduce the time needed to drain a segment of the Brine Line if a spill does occur. For the 24-inch pipeline and an isolation valves every 1,500 feet the volume to be dewatered is approximately 35,000 gallons.
3. Provide access for maintenance personnel for inspection, cleaning, or repair. Flow upstream of the isolation valve could then be pumped out of the 12" access tee assembly located immediately upstream of the isolation valve and diverted to the downstream MAS. This will be the means for bypass pumping during installation of pressure CIPP lining as part of both the Short and Long-Term Brine Line Rehabilitation Projects. See Figure 26.

The recommended isolation valve for use on the Brine Line is a 24-inch plug valve. Plugs valves are furnished with an elastomer-coated plug and will provide driptight shut-off at full pressure rating and are often used in sewage force mains and brine lines. Like the gate valve, a plug valve has an unobstructed flow, yet requires only a 90 degree turn to open it. It also requires very little headroom. 24-inch gate valves are 4'-9" tall in the closed position. As such, they would not fit in areas where the pipe had 5 or 6 feet of cover. Plugs valves are wider but shorter and (28.5 inches) and do not have a rising stem. The stems on Plug valves have minimal corrosion because there are no screw threads. Plug valves used on the Brine Line will be installed with restrained mechanical joints. See Figure 26.

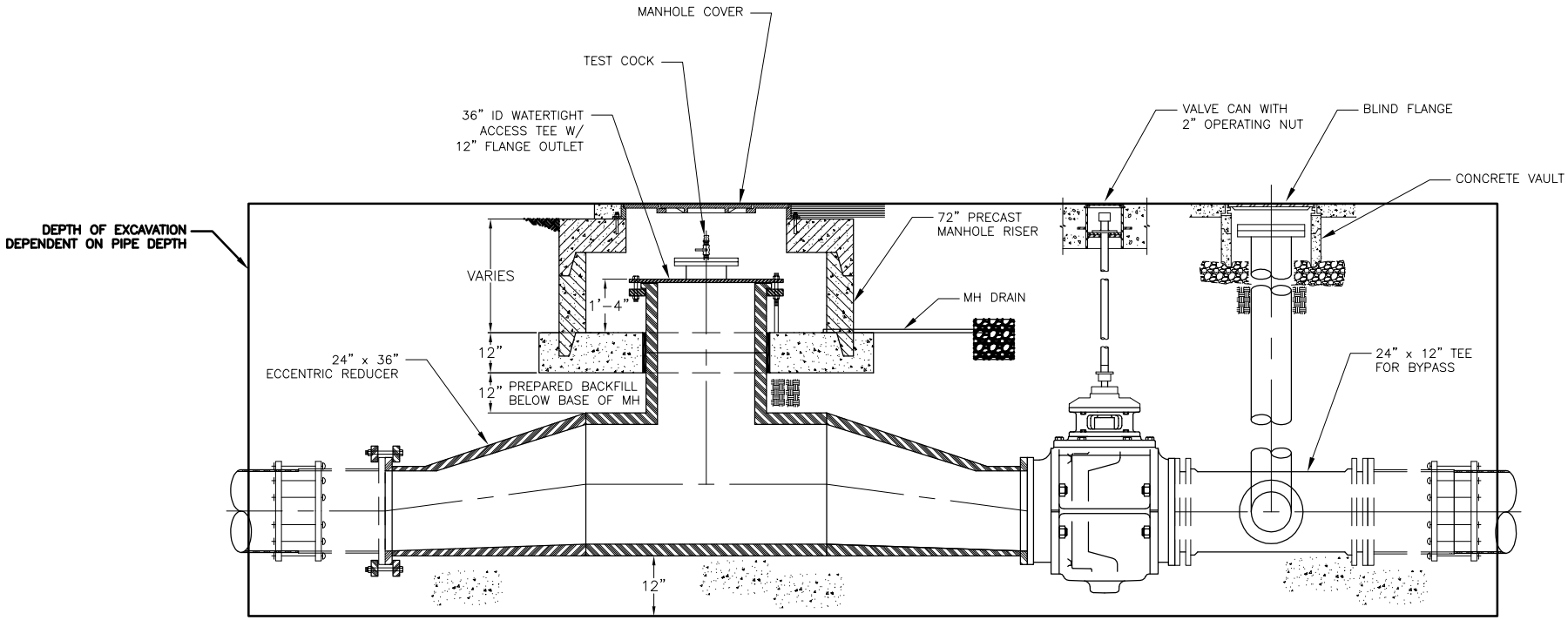

PROFILE VIEW

SCALE: NTS

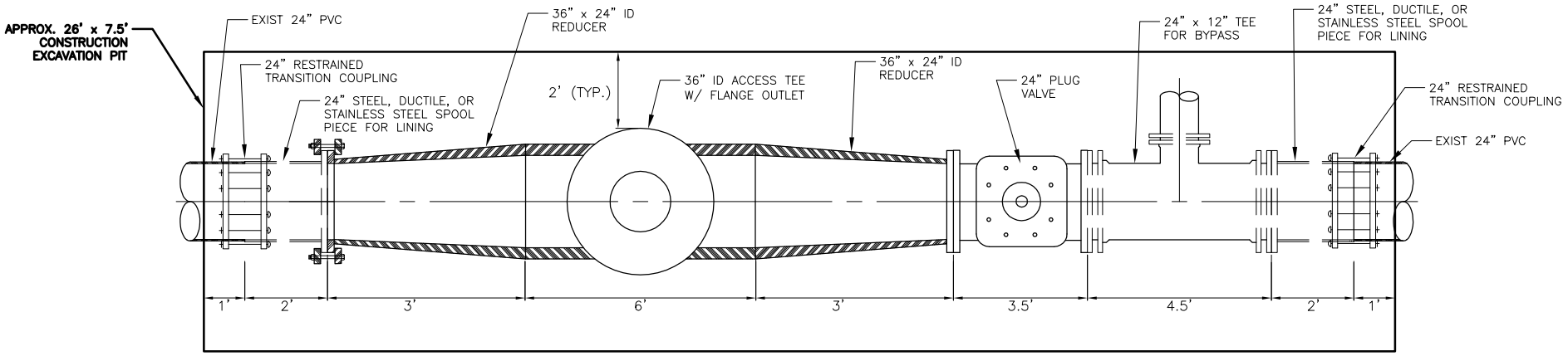

PLAN VIEW

SCALE: NTS

RMC Water & Environment

Figure 26. Maintenance Access Structure with Isolation Valve and Access Tee

FILENAME: Vault_Layout 4-22-13 09:39:04am byoung II XREFS: 8-5X11 FIG BORD KK--

Last Saved By: byoung 4-22-13 09:38:57am

6.3 Air/Vacuum Valves

As part of the surge analysis, Flow Science completed an inventory of the 56 existing air, vacuum, and combination valves on Reach V of the Brine Line. They then made recommendations regarding design and sizing of existing valves as well as recommendations for valving replacement and retrofits. Table 9 is a summary of existing valves on Reach V of the Brine Line. Table 10 is a summary of their recommendations for valve replacement or retrofit.

See Appendix D for a complete inventory of existing valves on Reach V of the Brine Line.

Table 9. Existing Air, Vacuum, and Combination Valves on Reach V of the Brine Line.

Valve Make	Valve Model	Valve Size	Type of Valve	Number on Reach V
Cla-Valve	34-ww45-316k	4”	Air Release	4
ARI	D-025	4”	Combination	7
Crispin	AL41	4”	Standard Air and Vacuum	14
Valmatic	804x003	4”	Combination	31

Table 10. Recommendations for Valve Retrofit or Replacement

Valve Make and Model	Issue	Recommendation	Timing
Cla-Valve, Model 34-ww45-316k	Valve has a small orifice that only vents air that accumulates over time under normal operations. Will not provide any protection from vacuum conditions and will not vent large volumes of air during pipeline filling.	Replace with vacuum relief/air inlet valve in combination with a small orifice air release valve (APCO Series 1500C, Valmatic 1800VB/38, Crispin VR31/M5, or equivalent)	Because of the existing valve’s inability to deal with vacuum, it is recommended to replace this valve as soon as possible. To be added to the Short-Term Rehabilitation Project.
ARI, Model D-025	Valve has a small orifice area (2.346 in^2) equivalent to a 1.25” CAV. Actual orifice area required is 12.6 in^2.	Replace with vacuum relief/air inlet valve in combination with a small orifice air release valve (APCO Series 1500C, Valmatic 1800VB/38, Crispin VR41/M5, or equivalent)	Because the existing valve is undersized, it is recommended to replace this valve as soon as possible. To be added to the Short-Term Rehabilitation Project.

Table 10. Recommendations for Valve Retrofit or Replacement (Continued)

Valve Make and Model	Issue	Recommendation	Timing
Crispin, Model AL41	Has sufficient capacity for the system. Contains a large orifice that vents air during pipeline filling. Because air can vent from a pipeline rapidly during filling, these valves can slam closed leading to water hammer and possible damage to the pipe and valves.	• Fill pipe no faster than 1 ft/sec as explained in the AWWA Manual of Water Supply Practices M51. • Equip valves with an 'anti-slam' or 'surge check' valve immediately underneath the CAV. • Control the rate at which air is vented from the system by replacing with vacuum relief/air inlet valve in combination with a small orifice air release valve (APCO Series 1500C, Valmatic 1800VB/38, Crispin VR31/M5, or equivalent)	Replace all valves as specified. To be added to the Long-Term Rehabilitation Project.
Valmatic, Model 804x003	Has sufficient capacity for the system. Contains a large orifice that vents air during pipeline filling. Because air can vent from a pipeline rapidly during filling, these valves can slam closed leading to water hammer and possible damage to the pipe and valves.	• Fill pipe no faster than 1 ft/sec as explained in the AWWA Manual of Water Supply Practices M51. • Equip valves with an 'anti-slam' or 'surge check' valve immediately underneath the CAV. • Control the rate at which air is vented from the system by replacing with vacuum relief/air inlet valve in combination with a small orifice air release valve (APCO Series 1500C, Valmatic 1800VB/38, Crispin VR31/M5, or equivalent)	Replace all valves as specified. To be added to the Long-Term Rehabilitation Project.

If SAWPA chooses to control the rate at which air is vented from the system by replacing their existing valves with vacuum relief/air inlet valves in combination with a small orifice air release valve as is contained in the APCO Series 1500C, the Valmatic 1800VB/38, the Crispin VR31/M5, or other equivalent, there is concern on the part of SAWPA that the "slow closing" mechanism on these types of valves may cause a sanitary sewer overflow (SSO) on the Brine Line. To ease their concerns, it is recommended that SAWPA try to replace an existing valve in one location with one of the recommended "slow closing" type valves and monitor the valve site for any SSOs. According to manufacturer's literature, the recommended "slow closing" valves will close as soon as any air tries to escape (1/4 psi seating pressure). Therefore, SSOs are not anticipated, even in low pressure locations. However, retrofitting existing valves could lead to some discharge. Per manufacturer's literature, the recommended replacement valves should fit into SAWPA's existing air release vaults and/or cans. See Table 11.

Table 11. Comparison of Existing and Recommended Air Release Valve Dimensions

Valve Make and Model	Valve Dimensions
Existing Valves	
Cla-Valve, Model 34-ww45-316k	7" wide X 15" tall
ARI, Model D-025	14.6" wide X 18.1" tall
Crispin, Model AL41	14" wide X 17.3" tall
Valmatic, Model 804x003	11" wide X 23.5" tall
Recommended Valves	
APCO Series 1500C	7" wide X 12.5" tall
Valmatic 1800VB/38	17.4" wide X 15.9" tall
Crispin VR31/M5	13.5" wide X 13.3" tall

7 Near, Short and Long-Term Project Recommendations

7.1 Recommendations Summary

Based on the Risk Assessment that was performed on Reach V, Contracts II and III as well as areas of concern in Contracts IV and V, RMC has the following recommendations for the Near, Short and Long-Term Projects for the SAWPA Brine Line as identified below:

Near-Term Project (Prior to Short-Term Project)

Prior to the start of the Short-Term Project complete the following:

- Install 26 Manhole Access Structures
- Install 26 Plug isolation valves
- Install 26 Access tees for future bypass pumping

Short-Term Project (0 to 3 Years)

Within the next three years complete the following:

- Pressure CIPP Line approximately 12,000 feet of 24-inch PVC pipe in Reach V, Contracts II and III
- Pressure CIPP Line approximately 900 feet of 24-inch PVC pipe in Reach V, area of concern in Contract IV
- Replace 11 existing air release valves (CLA-Valve and ARI models)

Long-Term Project (4 to 10 Years)

Within the next four to ten years complete the following:

- Pressure CIPP Line approximately 6,300 feet of 24-inch PVC pipe in Reach V, Contracts II and III
- Pressure CIPP Line approximately 1,900 feet of 24-inch PVC pipe in Reach V, area of concern in Contract IV
- Replace 45 existing air release valves (Crispin and Valmatic models)

Please note that no work is assumed to be required for the area of concern in Reach V, Contract V. For figures showing the approximate planned location of MAS and isolation valves see Figures 27A through F. For graphical representations of both the Short and Long-Term Projects, see Figures 12 through 16.

Monitor Low Risk Areas

It is also recommended that SAWPA monitor low risk areas in Contracts II, III and areas of concern in Contracts IV and V. This would be done independently of the projects identified above. Monitoring of the low risk areas would entail periodic CCTV inspection of those areas identified as low risk. Inspectors should look for any apparent cracks or heavily deflected areas within the pipeline. In order to conduct the monitoring activities, SAWPA will have to either bypass pump between MAS or put the flows into temporary storage. Another option may be waiting until the IEEC has a scheduled shut-down and then temporarily suspend flows from the desalters. SAWPA could then use that window to conduct a CCTV inspection of one or two 1,500 foot sections of pipe. It is recommended to monitor the low risk areas approximately every 2-5 years. A detailed cost estimate and schedule has not been provided for monitoring activities as part of this report.

Figure 27A. Approximate Planned Location of Maintenance Access Structures, Isolation Valves, and Access Tees, Contracts II and III.

Figure 27B. Approximate Planned Location of Maintenance Access Structures, Isolation Valves, and Access Tees, Contracts II and III.

Figure 27C. Approximate Planned Location of Maintenance Access Structures, Isolation Valves, and Access Tees, Contracts II and III.

Figure 27D. Approximate Planned Location of Maintenance Access Structures, Isolation Valves, and Access Tees, Contracts II and III.

Figure 27E. Approximate Planned Location of Maintenance Access Structures, Isolation Valves, and Access Tees, Area of Concern Contract IV.

Figure 27F. Approximate Planned Location of Maintenance Access Structures, Isolation Valves, and Access Tees, Area of Concern Contract IV.

7.2 Hydraulic Impacts

There are no hydraulic impacts associated with the Near-Term MAS installation project. For a summary of hydraulic impacts for both the Short and Long-Term Projects, see Section 5.5.3.

7.3 Impacts to Existing Utilities

The Near-Term MAS installation project will require 26 separate excavations ranging in depth from 4 to 11 plus feet. Each excavation will be approximately 7.5 feet X 26 feet which includes room for the installation of the isolation valve and ancillary piping associated with the access tee. As has been stated previously, the Brine Line is located within a heavily congested utility corridor. So, siting the structure locations will be challenging. See Table 12.

Table 12. Known Existing Utility in the Vicinity of Planned MAS Locations

ID #	Approx STA	Utilities in Approximate MAS Location to be Protected
MAS 01	623+00	42" Water
MAS 02	608+00	Gas; Two Water Lines
MAS 03	593+00	None
MAS 04	579+20	Gas
MAS 05	564+40	None
MAS 06	548+40	8" High Pressure Gas; Telephone
MAS 07	532+06	8" High Pressure Gas
MAS 08	516+47	20" Water
MAS 09	500+10	42" Water
MAS 10	483+75	8" High Pressure Gas; 12" Water
MAS 11	465+38	8" High Pressure Gas; Sewer
MAS 12	451+40	42" Water; 21" Sewer; 8" High Pressure Gas
MAS 13	432+38	42" Water; 8" High Pressure Gas
MAS 14	415+80	8" High Pressure Gas; Telephone
MAS 15	397+40	Telephone; 20" Water
MAS 16	383+80	8" High Pressure Gas; Power Pole
MAS 17	369+10	Telephone
MAS 18	357+00	15" Sewer, 18" Water
MAS 19	225+00	Telephone
MAS 20	210+50	None
MAS 21	195+50	None
MAS 22	176+00	Telephone
MAS 23	161+00	Telephone; Exist. Manway structure
MAS 24	143+50	Telephone
MAS 25	125+50	Telephone
MAS 26	109+00	8" High Power Gas

Some shallow, small diameter and less critical utilities such as telephone, small diameter gas, or small diameter sewer may have to be relocated as part of the installation of these structures. Siting the MAS structures should be investigated further as additional existing utility information becomes available. As with the installation of CIPP lining access pits, there will be a balance required during the design process between calling for the installation of an MAS at a proper distance from the adjacent MAS and finding a

location within Temescal Canyon Road where it would be appropriate to excavate and install an MAS amongst the existing utilities. Potholing of existing utilities during design of this project is recommended.

Eighteen pressure CIPP lining access pits are assumed required for rehabilitation of the Brine Line included in the Short-Term Project and 21 pressure CIPP lining access pits are assumed required for rehabilitation of the Brine Line included in the Long-Term Project. For further discussion of impacts to existing utilities for both the Short and Long-Term Projects, see Section 5.5.2.

7.4 Traffic Impacts

Near-Term MAS installation project

The excavations associated with the Near-Term MAS installation project will have to the located directly above the existing pipe. The pipe is located within both 2 and 4-lanes sections of the road in both the east bound and west bound lanes. In addition, the pipe is located in the road median, on it shoulder, and in the road right-of-way outside the travelled way. As such, traffic control needs and requirements will change along the existing alignment and with the installation of each MAS. Because the excavation for each MAS will be large (approximately 7.5 feet X 26 feet) and will likely require significant shoring, each excavation is assumed to take one or two days to complete before construction of the MAS even begins. In addition, flow reduction and temporary complete system shut-down will need to be coordinated with SAWPA, EMWD, and its customers. (See Section 8 – Project Phasing and Implementation for further discussion regarding anticipated brine flow down time associated with this project.) Traffic control for the installation of each structure will likely be needed for several days. Until the structures are sited during the final design phase based on existing utility information, it is difficult to provide further details regarding traffic control at each of the locations at this time.

Short-Term Pressure CIPP Lining Rehabilitation Project

For a discussion regarding traffic control impacts associated with pressure CIPP lining, see Section 5.5.2.

Long-Term Pressure CIPP Lining Rehabilitation Project

For a discussion regarding traffic control impacts associated with pressure CIPP lining, see Section 5.5.2.

7.4.1 General Permitting Requirements

All three projects outlined previously are located within the City of Corona, unincorporated Riverside County, and Caltrans jurisdiction. Because of this, each project will require encroachment permits from two or all three entities, depending upon where the project is located. Each entity will have a separate set of traffic control requirements that must be adhered to. The Contractor who is chosen to do the work for each of the projects will be required to prepare a traffic control plan and submit it to the governing agency whose encroachment permit they wish to acquire. This should be a requirement that is included in the contract specifications for each of the projects.

7.5 Residential and Commercial Impacts

7.5.1 Local Traffic

For all three recommended projects, there will be some limited short-term impacts to both residential and commercial neighbors. All three projects will have implications to local traffic for both residents and commercial properties. Disruption can be minimized by limiting construction activities to outside commute hours and maintaining one lane of through traffic at all time. In addition, provisions should be added to the contract specifications to maintain access to commercial and residential driveways at all times.

7.5.2 Noise

There will be limited short-term noise impacts within the construction zone. This is particularly true with pressure CIPP lining operations associated with both the Short and Long-Term Projects. Liner curing takes approximately 8 to 12 hours. And, once started, it cannot be suspended and restarted. Therefore, much of CIPP curing operations take place as night work. The boilers the produce the hot water for liner curing can be relatively loud, especially during more quiet nighttime hours. However, most boiler systems are within the decibel noise limits adopted my most local jurisdictional Cities and Counties. Limiting the boiler noise decibel output is something that should be addressed in the Contract specifications.

7.5.3 Impacts to Local Businesses

The excavation associated with the Near, Short, and Long-Term projects is at localized discrete points along the alignment. Because of this, there should not be any major impacts or loss to local businesses in the area associated with construction of the three projects as described above. Especially when compared to an open cut replacement project. This is especially true if provisions are put in the contract specifications to keep access to business driveways open at all times. There should also be provisions put in the contract requiring local signage indicating whether or not a business and open and the best way to access the business during construction.

7.6 Anticipated Construction Easement Requirements

It does not appear that any temporary or permanent construction easements will be required. A majority of the existing Brine Line alignment is located within the Temescal Canyon Road public right-of-way. So, only encroachment permits from local jurisdictional agencies and Caltrans will most likely be required for the construction of all three projects. However, there is short section of pipe located on the western edge of Temescal Canyon Road from Tom's Farms to just south of the intersection of Temescal Canyon Road and Squaw Mountain Road that may be outside of the public right-of-way. If this is the case, both temporary construction and permanent easement will need to be acquired for the installation of two MAS and the excavation of one access pit for the Short-Term Project. See Figure 28.

Figure 28. Potential Construction and Permanent Easement Locations

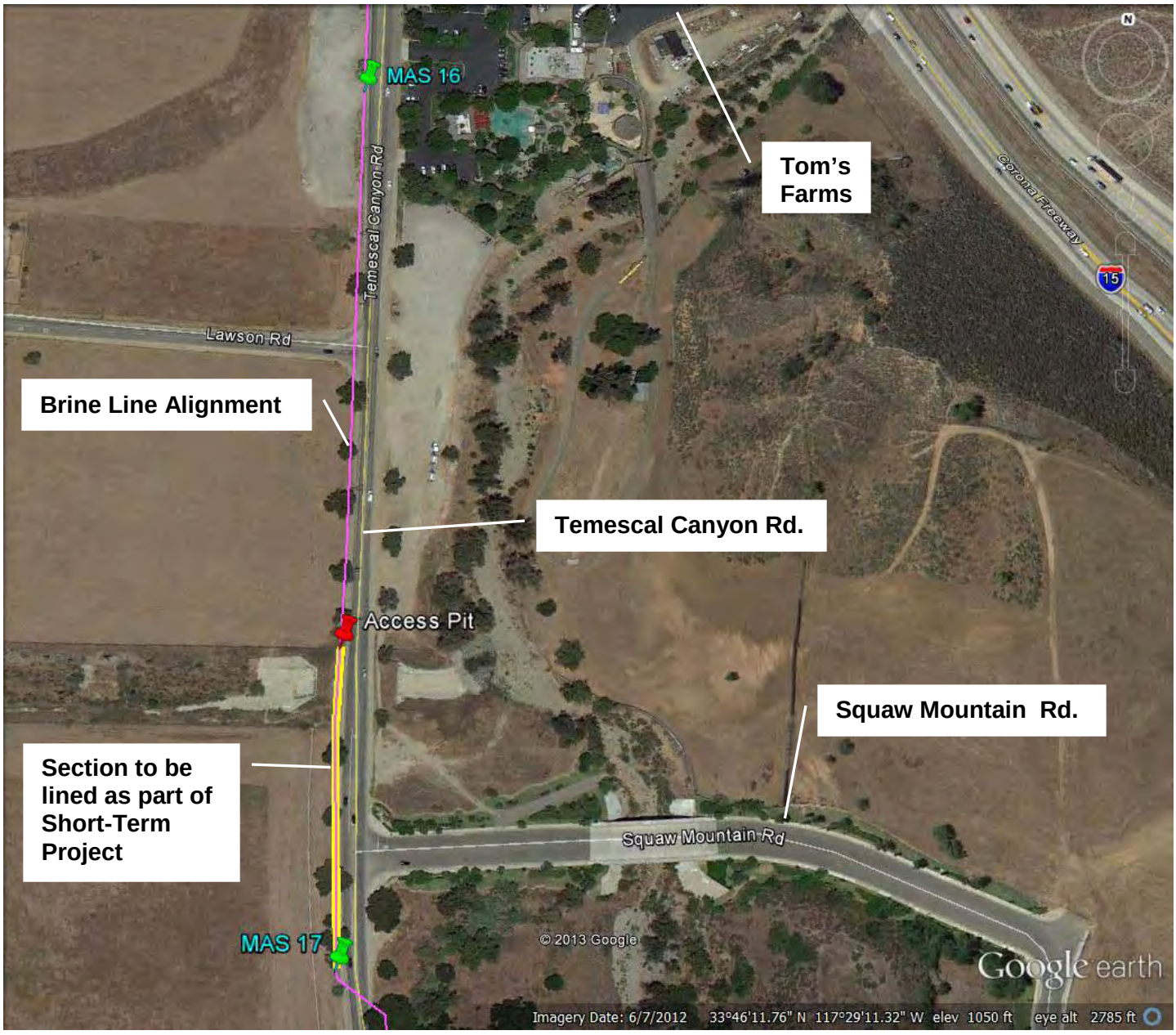

8 Project Phasing and Implementation

8.1 Near-Term Maintenance Access Structure Installation Project

8.1.1 Recommended Phasing

It is recommended that this project be implemented first. The installation of new maintenance access structures, isolation valves, and access tees for future bypass pumping is necessary in order to implement both the Short and Long-Term Pressure CIPP Lining Rehabilitation Projects. In addition, the MAS will be necessary for access to the pipeline to terminate the CIPP liner and install end seals. The isolation

valves and access tees will be required to conduct bypass pumping operations necessary for liner installation.

The following section is a discussion on sequencing and installation of maintenance access structures and associated valving which will likely occur as a separate project prior to the start of any lining projects.

8.1.2 Brine Flow Management

Because there will be no means to divert flow during construction of the MAS structures, the Brine Line will not be bypassed pumped during the Near-Term Project. As a result, all flows will need to be stopped or stored when installing the MAS structures.

Per information provided from EMWD, the storage volume available at their Sun City Treatment Facility is 2.5 million gallons. The existing flows from desalters can be temporarily shut down. Flow from the IEEC facility cannot be temporarily shut-down. The IEEC facility maximum permitted discharge is 1.2 MGD (see Section 3.6.1). However, the IEEC facility currently produces flows ranging from .08 MGD (winter) to approximately 1 MGD (summer). Therefore, using the current worst case discharge scenario, it is estimated that storage time by EMWD is up to a maximum of 2.5 days total. This is the assumed maximum amount of time the Brine Line can be down for a given period before storage has been exhausted and flows need to be released back into the Brine Line. It is assumed that no additional shutdown can commence after completion of construction of a pair of MAS for a period of 4 days to allow for adequate drainage of storage facilities plus time to equalize the line.

EMWD is currently investigating locations for additional storage. However, as of the finalization of this report, a location had not been identified and it is assumed that no additional storage is available.

8.1.3 Anticipated Down Time for Customers

For each MAS installation, the anticipated down time of the Brine Line is 2 1/2 days. It is anticipated that two structures can be installed concurrently. With a total of 26 MAS to be installed, that is a total downtime of approximately 33 days throughout the duration of the construction contract (see Section 8.1.4 below). However, as stated in Section 8.1.2, EMWD is investigating the option of providing additional storage that might eliminate the need for customer down time.

For each new pair of structures installed, flows will be shutdown at the end of Day 4 and the line allowed to drain overnight. A 25-foot PVC section will be removed and replaced with an HPDE manhole/accessway, 24-inch plug valve, 12-inch blow off, and stainless steel pipe spools in preparation for CIPP liner installation. Once flow has been suspended and the Contractor has access to the existing PVC pipe, he will be required to CCTV the existing pipeline to characterize the overall condition of the pipe and locate horizontal and vertical bends that may not be shown on the as-built drawings. During excavation, the contractor should also measure soil compaction around the existing pipe and take measurements of the pipe in order to characterize existing ovality. This information will be necessary during the design of the Short and Long-Term lining Projects. Once the new line is pressure tested and backfilled/compacted, flows can be released on Day 7. Flows will then be allowed to drain back into the Brine Line from the end of Day 7 through Day 11 and the process will start all over again for the next pair of structures. See Table 13 for a breakdown of construction steps for concurrent installation of two MAS structures steps by day.

Table 13. Construction Steps for Concurrent Installation of Two MAS Structures

Construction Step	Duration	Total
Mobilization at individual site	2 days	Day 2
Traffic control / Sawcutting (depending on location)	1 day	Day 3
Excavation (depends on depth to pipe).Typical trench length is 25-ft by 7.5-ft wide	½ day	Day 4
Shoring (depends on depth)	¼ day	
Shutdown of flows / drain pipeline segment via gravity overnight	¼ day	
Cut of existing PVC pipe segment, 25-ft length removed.	¼ day	Day 5
CCTV existing PVC pipe (1,500 foot length downstream). Measure existing soil compaction and pipe ovality. To be done simultaneous with work on upstream side of pipe.	½ day	
Install upstream 24" diameter steel, ductile, or stainless steel spool, 2-ft length on PVC w/ coupling	¼ day	
Install upstream 24"x12" tee with blow off connection	¼ day	
Install upstream 24" plug valve (will enable flows up to valve if needed)	¼ day	
Install upstream 24"x36" ID reducer with coupling	¼ day	Day 6
Install 36" ID HPDE tee (manhole) with 3-ft HPDE riser and HPDE blind flange	¼ day	
Install downstream 24"x36" ID reducer with coupling	¼ day	
Install downstream 24" diameter steel, ductile, or stainless steel spool, 2-ft length on PVC w/ coupling	¼ day	
Pressure test newly installed HPDE accessway and valve	¼ day	Day 7
Backfill and compact around valve and HPDE pipe	½ day	
Flows released through pipe section (<3 days downtime, flows released by end of day)	--	
Install poured in place manhole base around HDPE riser/blind-flange	½ day	Day 8
Concrete Cure time for manhole base (12 hours w/ compound)	½ day	
Install manhole precast risers	¼ day	Day 9
Backfill and compact around manhole	½ day	
Install manhole cover	¼ day	
Restoration (asphalt road) (depends on site location)	½ day	Day 10
Demobilization / traffic control removed at individual site	1 day	Day 11

8.1.4 Construction Duration

Based on the following assumptions, it is estimated that the total construction duration for the Near-Term MAS Installation Project will be 143 working days or 5 months.

Assumptions:

- There are a total of 26 new maintenance access structures that will be installed as part of this scope of work. Depths of these structures to the top-of-pipe (T.O.P.) vary from 4 to 11 feet. The average depth of the 26 MAS is 7 feet.
- 11 day duration per structure,
- 2 structures can be completed concurrently,
- Allowance of 4 days after any shutdown for flows to equalize,

- Weekend work is allowed to minimize downtime of the Brine Line.

8.2 Short-Term Pressure CIPP Lining Rehabilitation Project

8.2.1 Recommended Phasing

In order to stay within the desired three year time frame for the Short-Term Pressure CIPP Lining Rehabilitation Project, this project should occur shortly after the Near-Term MAS Installation Project has been completed. In order to meet this schedule, pre-design of the Short-Term Project should occur as part of the Near-Term Project design. Then, design of the Short-Term Project should begin concurrently with construction of the Near-Term project. See Section 8.4.for an overall suggested project implementation schedule.

8.2.2 Bypass Pumping

Several items must be considered when planning for bypass pumping operations including:

- Peak and average flow rates that will require pumping;
- Pump site access at both the suction and discharge points;
- Pipeline alignment, including traffic control and crossings of either roadways or driveways;
- Time required to install equipment;
- Availability of power or need for diesel engine driven pumps and fuel storage;
- System security;
- Spill response plan;
- 100% pump redundancy; and
- Coordination with local jurisdictions.

Existing System Flow Characterization

Due to the influence of the desalting and industrial facilities, the Brine Line does not experience the typical diurnal flow pattern of a domestic wastewater system. The Brine Line generally operates in either a high or low flow mode. The high flow period occurs when the desalting facilities are discharging at peak production (typically during the summer and/or periods of warm weather), and the low flow occurs when they are discharging at low production or are off-line (typically during the winter and/or periods of cool weather). The volume of flow contributed by non-desalter dischargers such as the IEEC power plant is fairly constant and does not appear to have a significant effect on the system flow pattern.

The practice of working with EMWD to temporarily suspend or reduce industrial and desalter discharges to reduce the total flow in the Brine Line will minimize the size of the required bypass pumping operations. However, there are other costs associated with doing so. EMWD must find alternative sources of clean water for its customers for the duration of the suspension or reduction. In addition, the IEEC power plant is unable to reduce or suspend its discharges for more than an approximate 24-hour period. So, reduction in their flow inputs could not be relied upon during bypass operations associated with the Short-Term Project. For the purposes of the cost estimate as presented in Section 10 below, we have assumed that a bypass pumping system will be required for the full brine flow during the high flow period on Reach V of the Brine Line. This is estimated to be approximately 3.25 MGD (as of June 2013). See Section 3.6.

Bypass System Description

MAS to MAS bypass pumping is the anticipated method for routing Brine Line flows around segments of the Brine Line to be lined as part of the Short-Term Project. Each bypass pumping system set-up would be capable of routing effluent through an alternate conduit from the MAS upstream of the

lining operation to MAS downstream of the lining, thereby isolating the section of the Brine Line being rehabilitated. Based on conversations with local bypass contractors in the area, the bypass system will most likely use 12-inch fused HDPE pipe laid on the ground surface with a single 12-inch pump. Under greater required suction heads and/or pumping distances, multiple pumps maybe used in series (i.e. booster pumps) to maintain the same flow rate. Standby/redundant pumps should also be furnished to prevent system downtime. A redundant piping system should also be furnished in case issues with the initial piping set-up are encountered during bypass operations. Initial pipe fusing and bypass system set-up would take approximately two weeks. The system could then be disassembled and relocated to the next MAS to MAS segment to be rehabilitated. Re-assembly at each new bypass location would take one or two days.

Under wet weather conditions and/or conditions removed from a source of electricity (e.g. generators), diesel pumps may be supplied over electric pumps. Certain diesel pumps, while providing an additional measure of safety over electric pumps in wet weather conditions, can also function quietly when sound-attenuation devices are used. Diesel pumps and diesel generators (to power electric pumps) will require refueling if operated for extended periods. The bypass contractor will arrange for fuel trucks to provide scheduled deliveries of fuel to the jobsite.

To the maximum extent possible, coordination with local jurisdictions such as the City of Corona, Riverside County, and Caltrans should occur during the design phase of the project. In addition, the selected Contractor should be required to submit a bypass pumping plan to the local jurisdictional agencies for the review and approval prior to the start of construction.

8.2.3 Anticipated Down Time for Customers

No down time is anticipated as part of this project. As mentioned in Section 8.2.2, it is assumed that the full brine flow during the high flow period (3.25 MGD) will be bypassed during construction.

8.2.4 Construction Duration

Thirteen MAS to MAS bypass set-ups are anticipated for rehabilitation of the 11,954 feet of Brine Line in Reach V, Contracts II and III and an additional one bypass set-up is anticipated for rehabilitation of the 876 feet of the Brine Line in Reach V, Contract IV. As mentioned in Section 5.5.2, a total of approximately 18 access pits will be required for the rehabilitation construction in both Contracts II and III and the area of concern in Contract IV. Based on this information, Table 14 shows a breakdown of anticipated construction duration for the Short-Term Pressure CIPP Lining Rehabilitation Project.

Table 14. Anticipated Construction Duration for Short-Term Pressure CIPP Lining Rehabilitation Project

Construction Task	Anticipated Duration per Set-Up (Working Days)	Total Duration per Activity (Working Days)
Mobilization	10	10
Initial Bypass Set-Up	10	10
MAS to MAS Construction Activities		
Bypass Relocation and Set-Up(1)	2	2 days x 14(4) = 28
CIPP Lining Activities(2)	10	10 days x 14 = 140
Flow Reinstatement(3)	1	1 day x 14 = 14
Punch List	10	10
Demobilization	10	10
	Total:	**222 Working Days**

(1) Bypass relocation and set-up to be done concurrently with setting up traffic control and excavating access pit.

(2) CIPP lining activities include setting up lining operation; cutting into existing pipe; pipe cleaning, prep and CCTV; lining inversion, curing, cool down, draining pipe to downstream, cutting liner ends, and installing end seals; installing spool piece, and backfilling excavation. See Table 4 Section 5.5.2

(3) Surface restoration shall be done concurrently with flow reinstatement.

(4) Number of anticipated MAS to MAS bypass set-ups required.

8.3 Long-Term Pressure CIPP Lining Rehabilitation Project

8.3.1 Recommended Phasing

The Long-Term Project was given a target implementation and completion date of within 4 to 10 years of the start of Fiscal Year 2013/2014. This timeframe was developed because this project was deemed less critical because of the lessened identified risk of the nature of the defects and the areas in which they were located. Because there is a broader range of time allowed for the Long-Term Pressure CIPP Lining Project, design of this project can start any time after the completion of the Short-Term Project. Timing of the Long-Term Project will be dependent upon SAWPA's long-term fiscal budget and the availability of funds to complete the project. See Section 8.4.for an overall suggested project implementation schedule.

8.3.2 Bypass Pumping

See Section 8.2.2 for a description of anticipated bypass pumping operations for the Long-Term Project. Sizing of the bypass equipment would be larger to accommodate future flows. Assumptions regarding equipment sizing can be found in Appendix E.

8.3.3 Anticipated Down Time for Customers

No down time is anticipated as part of this project. It is assumed that the projected full brine flow in 2017 during the high flow period will be bypassed during construction. The assumed flow for purposes of developing the cost estimate was 11 MGD.

8.3.4 Construction Duration

Nine MAS to MAS bypass set-ups are anticipated for rehabilitation of the 6,334 feet of Brine Line in Reach V, Contracts II and III and an additional five bypass set-ups are anticipated for rehabilitation of the 1,873 feet of the Brine Line in Reach V, Contract IV. As mentioned in Section 5.5.2 above, a total of approximately 21 access pits will be required for the rehabilitation construction in both Contracts II and III and the area of concern in Contract IV. Based on this information, Table 15 shows a breakdown of anticipated construction duration for the Long-Term Pressure CIPP Lining Rehabilitation Project.

Table 15. Anticipated Construction Duration for the Long-Term Pressure CIPP Lining Rehabilitation Project

Construction Task	Anticipated Duration per Set-Up (Working Days)	Total Duration per Activity (Working Days)
Mobilization	10	10
Initial Bypass Set-Up	10	10
MAS to MAS Construction Activities		
Bypass Relocation and Set-Up(1)	2	2 days x 14(4) = 28
CIPP Lining Activities(2)	10	10 days x 14 = 140
Flow Reinstatement(3)	1	1 day x 14 = 14
Punch List	10	10
Demobilization	10	10
	Total:	**222 Working Days**

(1) Bypass relocation and set-up to be done concurrently with setting up traffic control and excavating access pit.

(2) CIPP lining activities include setting up lining operation; cutting into existing pipe; pipe cleaning, prep and CCTV; lining inversion, curing, cool down, draining pipe to downstream, cutting liner ends, and installing end seals; installing spool piece, and backfilling excavation. See Table 4 Section 5.5.2

(3) Surface restoration shall be done concurrently with flow reinstatement.

(4) Number of anticipated MAS to MAS bypass set-ups required.

8.4 Overall Project Implementation Schedule

Figure 29 shows an overall suggested implementation schedule for the Near-Term, Short-Term, and Long-Term Projects as presented in this report.

When implementing the CIPP lining projects (Short-Term and Long-Term Projects) it is recommended that SAWPA make it mandatory that all Contractors who intend to submit a Bid for these projects fully complete a Statements of Pre-Qualifications ("SOPQ") package, provide all materials requested, and be pre-qualified by SAWPA to be on the final qualified Bidder's list. The final list of pre-qualified Contractors should be stated in the project Bid Documents. Prequalification for the Short and Long-Term Pressure CIPP Lining Rehabilitation Projects is recommended because large diameter structural pressure CIPP lining is still a relatively new product in the marketplace. There are many Contractors who have the experience and skills to install gravity CIPP liner. But, structural pressure liner has different installation parameters and requirements that require a different set of skills, knowledge, and experience. Therefore, it is important to get a contractor who is experienced in dealing with CIPP for structural pressure applications. This is especially true when installing a relatively large 24-inch diameter liner.

The following assumptions were made in preparation of the overall implementation schedule:

- The Near-Term MAS Installation Project design phase will begin in early September of 2013. This will allow SAWPA time for revenue planning, budget development, and implementation of a full RFP process for design of the initial project.
- In order to meet the 3-year Short-Term Project implementation schedule, predesign of the Short-Term Project will begin during design of the Near-Term MAS Installation Project. The predesign will rely on existing utility potholing information and final MAS placement locations to help pre-plan lining set-up and access pit locations.
- Design of the Short-Term Pressure CIPP Lining Rehabilitation Project will begin during construction of the Near-Term Project. Construction data such as pipe ovality and soil compaction data at MAS locations as well as CCTV inspection data showing the exact location of vertical and horizontal bends in the existing PVC pipe will help to develop final design for the CIPP lining. This will allow the Short-Term Project to be completed within 3 years of the start of Fiscal Year 2013/2014. As was previously mentioned in Section 4, the Short-Term Project's 3-year timeframe was developed because of the project was deemed an emergency due the observed defects in the existing Brine Line and the critical nature of the "High Risk" areas to be rehabilitated as part of this project. The identified 3-year timeframe is a realistic yet aggressive timeframe to implement the project.
- Contractor Prequalification should be implemented prior to the final project bid for the Short-Term Project. The prequalification process takes approximately 3 months.
- Construction of the Short-Term Project cannot begin until Construction of the Near-Term Project has been completed as the lining contractor will need the MAS structures in order to set up his bypass and install the liner.
- Design and construction of the Long-Term Project will begin after the completion of construction of the Short-Term Project. Exact timing will be based on SAWPA's available finances. A suggested timing is presented in the schedule.

As the schedule is presented, the Near, Short, and Long-Term Project will be completed independently and one after the other in a linear timeframe. SAWPA does have the option of completing all three projects at once. Of course, the MAS installation will have to be phased during construction so that it occurs first as these structures are necessary for bypassing flows and installing the CIPP liner. The benefits of completing all of the work as one large project are as follows:

- The possibility of getting a better bid price because of economy of scale (i.e. the larger the volume of work, the better the unit bid price).
- Peace of mind associated with rehabilitating the medium risk segments within the same time frame as the high risk segments.
- Disruption will occur all at once and will not drag on for several years as it would if the projects were completed in a linear fashion.

There are some concerns and issues associated with completing this work as one large project. These include:

- The high cost of doing the work all at once in a shorter period of time. This may have a profound impact on SAWPA's financing and customer rates. If SAWPA chose to complete the project in a linear fashion, they would have the ability to spread out and finance each separate

project separately. This would allow SAWPA to spread out impacts to its customers over a longer period of time.

- Economy of scale may not be as applicable for this work. Both the Short and Long-Term Projects as identified in this report call for very high footage of CIPP rehabilitation. As such, SAWPA will probably already see any economy of scale value for each of these separate projects. Lumping these projects together will probably not yield a tremendous amount of cost savings in the price per foot CIPP installed.
- Disruption associated with construction will be extensive within a short period of time.
- The individual projects are large enough that SAWPA would get the same Contractor bid pool for the individual projects versus one large project.

Based on all of these factors, it is recommended that the work be bid out as separate more manageable project packages as presented in this report.

9 CEQA Documentation

An Initial Study and Mitigated Negative Declaration were completed in 1998 for construction and operation of the 22-mile Temescal Valley Brine Line alignment and appurtenances (Krieger & Stewart 1998). A Mitigation Monitoring Program was adopted to reduce potential impacts to wetlands, coastal sage scrub, and sensitive wildlife species along the alignment.

The proposed improvements associated with this condition assessment include installation of manhole structures and section of CIPP lining within a total distance of approximately 7.5 miles of the Brine Line along Temescal Canyon Road between Glen Ivy Road and La Gloria Street. Construction and staging areas would be limited to roadway rights-of-way and directly adjacent areas, and would not impact sensitive habitat areas.

Although construction of the pipeline improvements could potentially result in minor traffic disruptions, noise, and air emissions, all of these impacts would be considered less than significant and would be addressed through standard construction practices.

Because these improvements would not have a significant effect on the environment, SAWPA can file a Notice of Exemption under CEQA Guidelines §15301 Existing Facilities, which exempts operation, repair, maintenance, or minor alteration of existing public facilities, including sewerage pipelines. The Notice of Exemption shall include a brief description of the project, location, finding that the project is exempt, and brief statement supporting the finding.

It is important to note that as SAWPA is pursuing SRF Loan Funding for this project, CEQA Plus documentation will have to be prepared as part of the loan application.

Figure 29. Overall Project Implementation Schedule

Task Name	Duration	Start	Finish
Notice to Proceed	0 days	Wed 2/20/13	Wed 2/20/13
Condition Study	58 days	Wed 2/20/13	Fri 5/10/13
RFP Process for Selection of Design Consultant	60 days	Mon 6/10/13	Fri 8/30/13
Near-Term MAS Installation Project	318 days	Tue 9/3/13	Thu 11/20/14
Design	60 days	Tue 9/3/13	Mon 11/25/13
Pre-Design of Short-Term Project	60 days	Tue 9/3/13	Mon 11/25/13
Bid	25 days	Tue 12/3/13	Mon 1/6/14
Award	30 days	Tue 1/7/14	Mon 2/17/14
Contractor Submittals	20 days	Tue 3/4/14	Mon 3/31/14
Material Lead Time	40 days	Tue 3/11/14	Mon 5/5/14
Construction	143 days	Tue 5/6/14	Thu 11/20/14
Project Completion	0 days	Thu 11/20/14	Thu 11/20/14
Short-Term Pressure CIPP Lining Rehabilitation Project	488 days	Tue 5/6/14	Thu 3/17/16
Design	90 days	Tue 5/6/14	Mon 9/8/14
Contractor Prequalification	60 days	Tue 9/9/14	Mon 12/1/14
Bid for Prequalified Contractors	26 days	Tue 12/30/14	Tue 2/3/15
Award	30 days	Wed 2/4/15	Tue 3/17/15
Contractor Submittals	30 days	Wed 4/1/15	Tue 5/12/15
Construction	222 days	Wed 5/13/15	Thu 3/17/16
Project Completion	0 days	Thu 3/17/16	Thu 3/17/16
Long-Term Pressure CIPP Lining Rehabilitation Project	489 days	Mon 9/5/16	Thu 7/19/18
Design	90 days	Mon 9/5/16	Fri 1/6/17
Contractor Prequalification	60 days	Mon 1/9/17	Fri 3/31/17
Bid for Prequalified Contractors	27 days	Mon 5/1/17	Tue 6/6/17
Award	30 days	Wed 6/7/17	Tue 7/18/17
Contractor Submittals	30 days	Wed 8/2/17	Tue 9/12/17
Construction	222 days	Wed 9/13/17	Thu 7/19/18
Project Completion	0 days	Thu 7/19/18	Thu 7/19/18

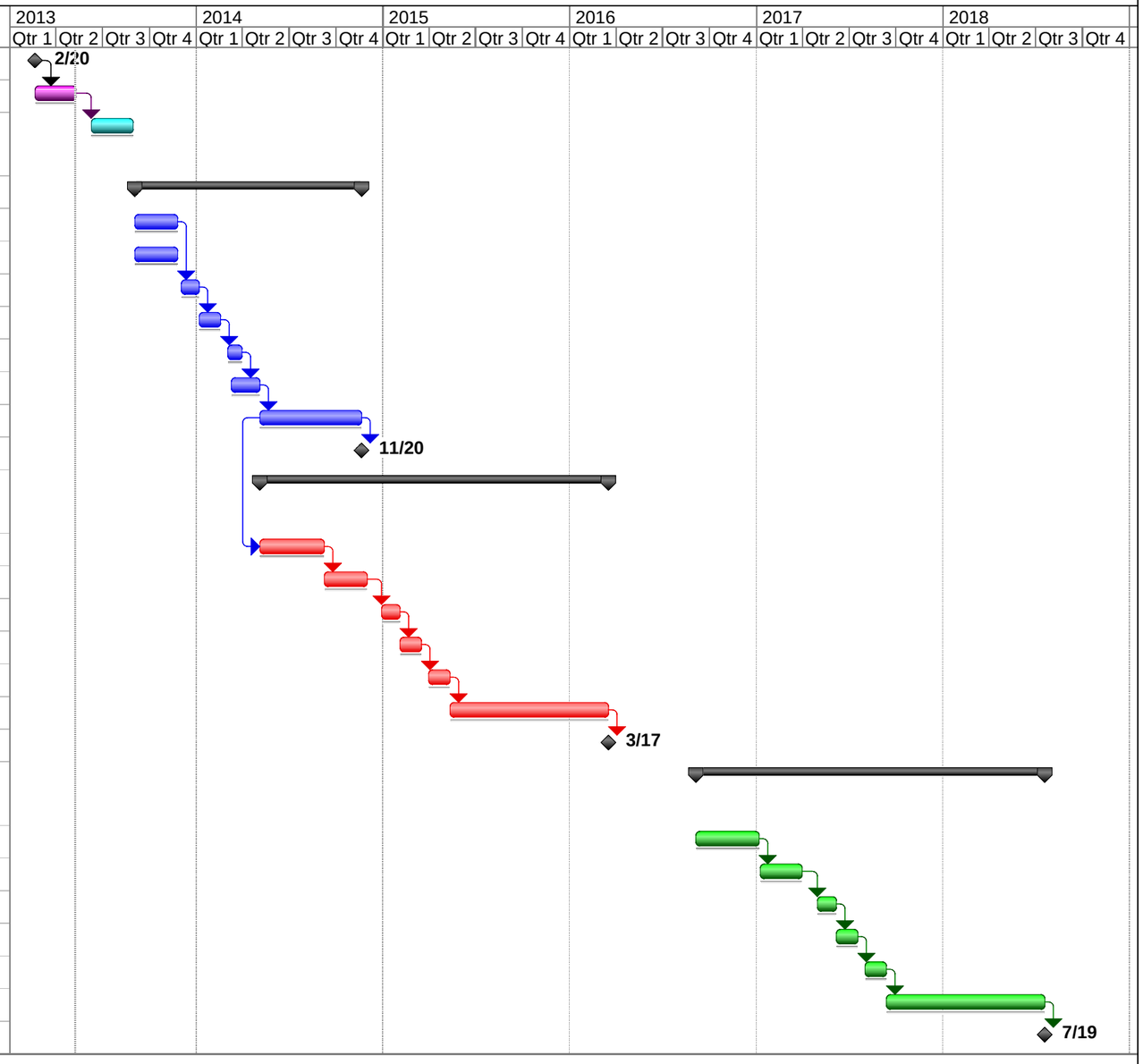

Figure 29
May 2013

Task
Split
Progress
Milestone
Summary
Project Summary
External Tasks
External Milestone
Deadline

10 Construction Costs for Recommended Projects

Table 16 is a summary of estimated conceptual level construction costs for the Near, Short and Long-Term Projects as presented and recommended in this report. Tables 17A through 19 show a complete breakdown of costs for each Project. Appendix E is a summary of Cost Estimate Unit Cost Data. The basis for the costs are described below.

10.1 Accuracy

Cost estimates reflect a conceptual level of project development with an accuracy of +30% to -50% to the actual cost. This is commensurate with a Class 5 estimate as defined by the Association for the Advancement of Cost Engineering (AACE), Publication 18R-97. The level of development is to a conceptual planning level. Further refinement of the concept will impact costs and all costs should be updated as the concept is refined through the design process.

Table 16. Summary of Estimated Conceptual Level Construction Costs for Near, Short, and Long-Term Projects

Project	Estimated Conceptual Level Cost Range[1]
Near-Term Maintenance Access Structure Replacement Project[2]	$1.9 to $3.7 Million
Short-Term Pressure CIPP Lining Rehabilitation Project	$5.4 to $7.1 Million
Long-Term Pressure CIPP Lining Rehabilitation Project[3]	$4.2 to $5.5 Million
Total:	**$11.5 to $16.3 Million**

(1) Low price in range provided is construction subtotal plus 20% Engineering, ESDCs, CM, and cost of water loss (for Near-Term Project only). High price includes 30% conceptual design contingency plus 20% Engineering, ESDCs, CM, and cost of water loss (for Near-Term Project only).

(2) Project includes installation of isolation valves and access tees for future bypass operations.

(3) Does not include costs associated with condition monitoring to be conducted by SAWPA.

10.2 Benchmark

Costs are benchmarked to the Engineering News Record Construction Cost Index (ENRCCI for the Los Angeles area for February 2013 (ENRCCI LA for February 2013 is 10,284.93). For historic unit cost data, the unit costs have been escalated to February 2013 using the index.

10.3 Unit Cost Basis

Various unit cost data and estimating methods have been used to develop the conceptual level construction cost estimates. Other upfront costs have been included, including engineering , engineering services during construction, and construction management allowances. This estimate does not include SAWPA administrative costs or any costs associated with CEQA documentation, permitting, or easement acquisition. The basis for costs which have been included are described below.

Design Contingency: A 30% design contingency has been applied to the construction subtotal for undefined work associated with each project's construction. This could include mitigation of construction impacts for roadways and other affected improvements, miscellaneous structures and appurtenances, unknown utility impacts and potential need to relocate utilities in order to install MAS and lining access pits, and other as yet unidentified projects components.

Implementation Costs: A 20% allowance has been applied to the construction subtotal for implementation of each project, including engineering, engineering services during construction, and construction management.

May 10, 2013

Project: Santa Ana Watershed Project Authority
Inland Empire Brine Line Reach V Pipeline Condition Study
Table 17A: Conceptual Construction Cost Estimate - Near-Term MAS Installation Project

Project Number: 0183-001.01
Prepared by: RMC

ENR: 10284.93 (CCI Los Angeles - February 2013)

Estimate Type: **Conceptual Level Construction Cost Estimate**

Item	Quantity	Unit	Unit Cost	Total Cost(1)	Notes
Contractor Mobilization/Demobilization (5% of Line Items)	**1**	**LS**	**$ 75,000**	**$ 80,000**	
24-inch Isolation Valves	**26**	**EA**	**$ 28,500**	**$ 700,000**	Based on one isolation valve every 1,500 feet in all medium and high risk segments in conjunction with new Maintenance Access Structure. Valves assumed to be plug valve made from non-corrosive materials.
Maintenance Access Structures	**1**	**LS**	**$ 777,000**	**$ 800,000**	Price includes 26 new MAS and access tee installed. See Table 13B for more detail.
			Construction Subtotal	**$ 1,600,000**	
Conceptual Design Contingency			30%	$ 500,000	
Cost of Water Loss/Alternate Water Procurement	**33**	**DAY**	**$ 8,890**	**$ 300,000**	Provided by EMWD.
Cost of Brine Storage				**$ 200,000**	
Piping Work Installed on a Semi-Permanent Basis	1	LS	$ 23,900	$ 20,000	Provided by EMWD. See Appendix E.
Routine Costs Per Event	13	EVENT	$ 17,000	$ 200,000	Provided by EMWD. See Appendix E.
			TOTAL CONSTRUCTION COST	**$ 2,600,000**	
Engineering, ESDCs, and CM			20%	$ 500,000	
			TOTAL PROJECT COST	**$ 3,100,000**	

(1) Total cost rounded to the nearest $100,000.

May 10, 2013

Project: Santa Ana Watershed Project Authority **Inland**
Empire Brine Line Reach V Pipeline Condition Study
Table 17 B: Maintenance Access Structure Cost Estimate Detail for Near-Term Project

Project Number: 0183-001.01

Prepared by: RMC
ENR: 10284.93 (CCI Los Angeles - February 2013)

Estimate Type: Conceptual Level Construction Cost Estimate

	ID #	Approx STA	Jurisdiction	Depth to T.O.P. (ft) (2)	# of Lanes	Pipe Location in Street (3)	Construction Cost (1)	Utilities in Approximate Location to be Protected (4)	Cost Extension
Contracts II and III	MAS 01	623+00	Corona	8.5	2TP	TP	$ 29,017	42" WTR	$ 31,000
	MAS 02	608+00	Corona	10	4TP/M	TP	$ 29,017	Gas; Two WTR	$ 33,000
	MAS 03	593+00	Corona	8.5	4M	Median	$ 29,017	none	$ 30,000
	MAS 04	579+20	Corona	6	4M	west	$ 26,684	Gas	$ 28,000
	MAS 05	564+40	Corona	4	4M	Median	$ 26,684	none	$ 27,000
	MAS 06	548+40	Corona	5	4M	Median	$ 26,684	8" HPG; TELE	$ 29,000
	MAS 07	532+06	County	10	2TP	east	$ 29,017	8" HPG	$ 31,000
	MAS 08	516+47	County	7	2S	east	$ 29,017	20" WTR	$ 31,000
	MAS 09	500+10	County	4.5	4TP	west	$ 26,684	42" WTR	$ 28,000
	MAS 10	483+75	County	8	4TP	west	$ 29,017	8" HPG; 12" WTR	$ 32,000
	MAS 11	465+38	County	5	4TP	west	$ 26,684	8" HPG; SWR	$ 29,000
	MAS 12	451+40	County	7.5	2S	shoulder	$ 28,521	42" WTR; 21" SWR; 8" HPG	$ 32,000
	MAS 13	432+38	County	5	4TP	east	$ 26,684	42" WTR; 8" HPG	$ 29,000
	MAS 14	415+80	County	6	none (4TP)	shoulder	$ 26,189	8" HPG; TELE	$ 29,000
	MAS 15	397+40	County	9.5	2TP	west	$ 29,017	TELE; 20" WTR	$ 32,000
	MAS 16	383+80	County	5.5	none (2S)	shoulder	$ 26,189	8" HPG; Power Pole	$ 28,000
	MAS 17	369+10	County	5.5	none (2S)	shoulder	$ 26,189	TELE	$ 28,000
	MAS 18	357+00	County	11	2TP	TP	$ 34,766	15" SWR, 18" WTR	$ 37,000
Contract IV	MAS 19	225+00	County	4.5	2S	east	$ 26,684	TELE	$ 28,000
	MAS 20	210+50	County	10	2S	shoulder	$ 28,521	none	$ 29,000
	MAS 21	195+50	County	7	2S	shoulder	$ 28,521	none	$ 29,000
	MAS 22	176+00	County	5	2S	north	$ 26,684	TELE	$ 28,000
	MAS 23	161+00	County	6	2S	north	$ 26,684	TELE; Exist. Manway structure	$ 29,000
	MAS 24	143+50	County	6	2TP	north	$ 26,684	TELE	$ 28,000
	MAS 25	125+50	County	6.5	2S	north	$ 29,017	TELE	$ 31,000
	MAS 26	109+00	County	10	2S	south	$ 29,017	8" HPG	$ 31,000
						Subtotal:	**$ 726,889**	**Total:**	**$ 777,000**

KEY:

TP=turn pocket, non-divided road
M=median, divided road
S=shoulder on both sides

east/west/north/south = lanes
shoulder = outside of paved road
Median=under raised median
TP=under paved, un-raised median

(1) Items included in the MAS cost estimate include: shoring, 36"x24" HDPE reducers, 36" HDPE tee, 12" blow-off and the concrete manhole (section and base). Cost for 24" plug valve is separate as shown in Table 13A.

(2) As excavation depths increase at each MAS, the cost for shoring each excavation increases substantially, which affects the cost of the MAS the greatest.

(3) Physical location of the MAS outside of a paved street reduces costs for traffic control, sawcutting and restoration of pavement. This cost reduction, however, is minimal at less than 2% of total MAS costs.

(4) Where utilities are known to be present, a cost is included to protect the number of known utilities at the proposed MAS location. No cost is included to relocate utilities in conflict.

May 10, 2013

Project: Santa Ana Watershed Project Authority
Inland Empire Brine Line Reach V Pipeline Condition Study
Table 18: Conceptual Construction Cost Estimate - High Risk/Short-Term (2 Years)

Project Number: 0183-001.01
Prepared by: RMC
ENR: 10284.93 (CCI Los Angeles - February 2013)

Estimate Type: Conceptual Level Construction Cost Estimate

Item	Quantity	Unit	Unit Cost	Total Cost (1)	Notes
Contractor Mobilization/Demobilization (5% of Line Items)	**1**	**LS**	**$ 216,500**	**$ 200,000**	
CIPP Sections				**$ 4,300,000**	
24-inch CIPP Lining	12,830	LF	$ 220	$ 2,800,000	Installation of a structural liner. Includes cleaning, prep, lining, and installation of end seals.
CIPP Access Pits	18	EA	$ 2,540	$ 50,000	CIPP Pit excavation, shoring, backfill, compaction. Surface restoration is included in pavement restoration item.
Pavement Restoration	1,296	SF	$ 5	$ 10,000	Each access pit is 12' X 6' or 72 square ft.
Traffic Control	1	LS	$ 77,500	$ 80,000	Necessary at insertion pits and MAS liner termination points only. Approximately $2,500 per pit. Approx 18 insertion pits. Approximately 13 MAS termination points.
Dewatering at Access Pits	1	LS	$ 4,900	$ 5,000	Groundwater not encountered along Reach II and III in the geotech report provided to RMC dated 4/13/99. Ground water also not encountered in 9 test pits. Dewatering only necessary at access pits for 876 feet of lining in Contract 4.
Dewatering Pipe	1	LS	$ 22,900	$ 23,000	Approximately 35,000 gallons per 1,500 foot pipe segment. 13 pipe segments. So, 458,000 gallons. Price from estimate provided by SAWPA. Based on $20,000 for dewatering 400,000 gallons.
Bypass Pumping	1	LS	$ 1,257,903	$ 1,300,000	See Unit Cost Criteria and Bypass Sheets in Appendix E.
Combination Air Valves Retrofit	**11**	**EA**	**$ 2,400**	**$ 30,000**	Per Surge Analysis recommendations, under "low flow conditions" all Valmatic CAVs remain and others replaced with 4" APCO Series 1500C combo valve. Unit price includes installation.
			Construction Subtotal	**$ 4,500,000**	
Conceptual Design Contingency			30%	$ 1,400,000	
			TOTAL CONSTRUCTION COST	**$ 5,900,000**	
Engineering, ESDCs, and CM			20%	$ 1,200,000	
			TOTAL PROJECT COST	**$ 7,100,000**	

(1) Total cost rounded to the nearest $100,000.

May 10, 2013

Project: Santa Ana Watershed Project Authority
Inland Empire Brine Line Reach V Pipeline Condition Study

Project Number: 0183-001.01
Prepared by: RMC
ENR: 10284.93 (CCI Los Angeles - February 2013)

Table 19: Conceptual Construction Cost Estimate - Medium Risk/Long-Term (3-10 Years)

Estimate Type: **Conceptual Level Construction Cost Estimate**

Item	Quantity	Unit	Unit Cost	Total Cost (1)	Notes
Contractor Mobilization/Demobilization (5% of Line Items)	**1**	**LS**	**$ 165,500**	**$ 200,000**	
CIPP Sections				**$ 3,200,000**	
24-inch CIPP Lining	8,207	LF	$ 220	$ 1,800,000	Installation of a structural liner. Includes cleaning, prep, lining, and installation of end seals.
CIPP Access Pits	21	EA	$ 2,540	$ 50,000	CIPP Pit excavation, shoring, backfill, compaction. Surface restoration is included in pavement restoration item.
Pavement Restoration	1,512	SF	$ 5	$ 10,000	Each access pit is 12' X 6' or 72 square ft.
Traffic Control	1	LS	$ 77,500	$ 80,000	Necessary at insertion pits and liner termination points only. Approximately $2,500 per pit. Approx 21 insertion pits. Approximately 10 termination points.
Dewatering at Access Pits	1	LS	$ 46,200	$ 46,000	Groundwater not encountered along Reach II and III in the geotech report provided to RMC dated 4/13/99. Ground water also not encountered in 9 test pits. Dewatering only necessary at access pits for 1,873 of lining in Contract 4.
Dewatering Pipe	1	LS	$ 24,500	$ 25,000	Approximately 35,000 gallons per 1,500 foot pipe segment. 14 pipe segments. So, 490,000 gallons. Price from estimate provided by SAWPA. Based on $20,000 for dewatering 400,000 gallons.
Bypass Pumping	1	LS	$ 1,159,153	$ 1,200,000	See Unit Cost Criteria and Bypass Sheets in Appendix E.
Combination Air Valves Retrofit	**45**	**EA**	**$ 2,400**	**$ 110,000**	Based upon replacement of the remaining valves not addressed in the high priority Short-Term Project with 4" APCO Series 1500C combo valve. Unit price includes installation.
			Construction Subtotal	**$ 3,500,000**	
Conceptual Design Contingency			30%	$ 1,100,000	
			TOTAL CONSTRUCTION COST	**$ 4,600,000**	
Engineering, ESDCs, and CM			20%	$ 900,000	
			TOTAL PROJECT COST	**$ 5,500,000**	

(1) Total cost rounded to the nearest $100,000.

Appendix A - Summary of Utility Information

SAWPA – REACH V Pipeline Condition Study Report

Utility Requests

Name	Contact	Address	Phone	email	Actions/Status	Mapping Status
AT&T DISTRIBUTION	Substructure Records Request Construction & Engineering	Call for Mailing address	(510) 645-2929 (main)			
City of Corona	Joanne Lewis (Sr. Eng Technician)	400 S Vicentia Ave Corona, CA 92882	(951) 736-2447	Joanne.Lewis@ci.corona.ca.us	• 4/16/13 – Emailed. • 4/16/13 – Contact Joanne Lewis to make arrangements at the City's workstation to research which plans are needed. Bring a CD	Set up Apt
City of Corona Dept of Water and Power	Efren Mejia	755 Corporation Yard Way Corona, CA 92880	(951) 739-4912	(efren.mejia@ci.corona.ca.us)	• 4/16/13 – Emailed. • 4/16/13 – Email address does not exist.	
Elsinore Valley MWD	Ron Brees (Eng. Technician)	PO Box 3000 Lake Elsinore, CA 92531-3000	(951) 674-3146	usa_tickets@evmwd.net rbrees@evmwd.net	• 4/16/13 – Emailed. • 4/22/13 – Received email to download files from EVMWD FTP site	Need to review 94 files received
Freedom Telecommunications – OC, Inland Empire	Frank Eck (Mgr, Bus. Develp.)	11110 Ohio Ave, Suite 111 Los Angeles, CA 90025	(310) 321-3991	feck@freedomdarkfiber.com	• 4/16/13 – Emailed. • 4/17/13 – Received PDFs	Need to review 9 files received
Lee Lake Water District	Jeff Pape	22646 Temescal Canyon Rd Corona, CA 92883	(951) 277-1414	jeffp@llwd.org	• 4/16/13 – Emailed.	
Level 3 Communications	Matt Prink (Business Analyst)	1025 El Dorado Blvd, Bldg 33A-522 Broomfield, CO 80021	(720) 888-2639	matthew.prink@level3.com	• 4/16/13 – Emailed. • 4/17/13 – received Zip files	Need to review 34 files received
Metropolitan Water - Mills	Substructures Team	PO Box 54153 Terminal Annex, Los Angeles, CA 90054	(213) 217-6679			
Sunesys, LLC	Robert Santos (Sr. Project Mgr)	1325 Pico St #106 Corona, CA 92881	(951) 278-0400	RSantos@sunesys.com	• 4/16/13 – Emailed. • 4/17/13 – Response, no utilities in area. • 5/1/13 – Received package in the mail with maps and invoice, invoice due 5/13/13.	Need to review plans received
Time Warner Telecom – Long Haul	Susan Harden	9665 Granite Ridge Dr, San Diego, CA 92123	(858) 805-6006	susan.harden@twtelecom.com	• 4/16/13 – Emailed. • Out of office until 4/18/13.	
SCE "UTILIQUEST FOR SCE DIST-ONTARIO"	Map Request Bldg D	Attn: Map Request Bldg D, Santa Ana, CA 92711-198	(714) 796-9999	maprequests@sce.com	• 4/16/13 – Emailed. • 4/17/13 – see FIM doc outlining procedure, $13.55 per hardcopy map	Waiting for 'okay' to proceed
SCE "UTILIQUEST FOR SCE DIST-SAN JACINTO"	Map Request Bldg D	Attn: Map Request Bldg D, Santa Ana, CA 92711-198	(714) 796-9999	maprequests@sce.com	• No request sent out, since listed twice	
SCE "UTILIQUEST FOR SC EDISON-TELECOMMUN"	Rolando Diaz	14799 Chestnut Ave Westminster, CA 92683	(714) 934-0827	(rolando.diaz@sce.com)	• 4/16/13 – Emailed. • 4/16/13 – Not the correct contact person.	
TWC "UTILIQUEST 4 TIME WARBER CABLE W RIV CO"	Cozette Miles [Kevin Knight]	1500 Auto Center Dr, Ontario, CA 91761 [CCI Systems 105 Kent St, Iron Mtn, MI 49801]	(909) 975-3398 [(906) 771-2204]	cozette.miles@twcable.com [kevin.knight@ccisystems.com]	• 4/16/13 – Emailed. • 4/17/13 – Received Files from CCI	Need to review 6 files received from CCI
VERIZON "UTILIQUEST FOR VERIZON - MENIFEE"			(760) 778-3620			
VERIZON "UTILIQUEST FOR VERIZON - PERRIS"			(760) 778-3620		• No request sent out since listed twice	
SC GAS – CORONA	Rod Duran	1981 W Lugonia Ave, Redlands, CA 92374	(909) 335-7583	rpduran@sempautilities.com	• 4/16/13 – Emailed.	
Western Municipal Water District	Tammy Martin	14205 Meridian Pkwy, Riverside, CA 92518	(951) 571-7100	tmartin@wmwd.com	• 4/16/13 – Emailed. • 5/2/13 – Response, no utilities in area.	
Santa Ana Watershed Project Authority (No need to send letter)	Rich Haller	11615 Sterling Ave, Riverside, CA 92503	(951) 354-4220	rhaller@sawpa.org		

	Received notification of no facilities in the project area
	Received Mapping
	Duplicate Contact

Appendix B - Final Reach V Surge Analysis Report

Flow Science Incorporated
723 E. Green St., Pasadena, CA 91101
(626) 304-1134 • FAX (626) 304-9427

TECHNICAL MEMORANDUM

Date: April 12, 2013

To: Jennifer Glynn, P.E.
Senior Project Manager
RMC

From: R. Scott Foster, P.E.
Flow Science Incorporated

Re: Santa Ana Watershed Project Authority
Inland Empire Brine Line Reach V Pipeline Condition Study
Pressure Surge Analysis
FSI 131005

The purpose of this Technical Memorandum (TM) is to provide a summary of the possible pressure surges that will propagate throughout the Reach V pipeline and the effects these pressure surges could have on the pipeline. On October 18, 2011, a brine spill occurred on Reach V near the intersection of Temescal Canyon Road and Cabot Road in the City of Corona (STA 555+61 of contract II/III) and SAWPA was concerned that a pressure surge may have caused the failure of the pipeline, leading to the subsequent spill.

The Reach V pipeline consists of 22 miles of 24-inch and 30-inch diameter PVC and 26-inch HDPE pipe of various diameter ratios (DR). At the upstream end of the reach, a pressure sustaining structure (PSS) normally delivers approximately two mgd (3.1 cfs), with a maximum design capacity of approximately 11.5 mgd (17.8 cfs), to the Reach V.

Flow originates in the existing EMWD Brine Line Lateral. This line is supplied flow from a series of three pump stations located at the Inland Empire Energy Center (IEEC), the EMWD Menifee/Perris I Desalter Facility, and the Perris II Desalter Facility. The Brine Line consists of approximately 27,200 feet of 12, 18, and 24-inch PVC pipe from IEEC to the Menifee/Perris I Desalter site, approximately 9,300 feet of 18-inch PVC pipeline from the Perris II Desalter to the line from IEEC, and 49,900 feet of 30-inch cement mortar lined and coated steel pipe from the Menifee/Perris I Desalter Facility to the PSS. When the PSS is in service, it is operated to maintain approximately 100 psi of upstream pressure so the pressure in the Brine Line remains above the pipeline elevation and there are no sections of open channel flow. Figure 1 contains a profile of the pipeline system with the air valve locations taken from provided GIS files along with approximate HGL elevations for flows of two mgd (from the GIS files) and 11.5 mgd. Note that these HGL elevations assume that all the air valves on the line are operational.

Upon entering Reach V on the downstream side of the PSS, the flow transitions between open channel and pipe full flow for its entire length to the end of the reach. At this point, it ties into Reach IVB of the Inland Empire Brine Line and continues to other downstream reaches of the interceptor, flowing by gravity its entire length.

Along the length of Reach V, there are at least 55 air valves, most of which are located at local high points throughout the reach. Provided plans for the five Reach V construction contracts show 4-inch, 3-inch, and 2-inch valves, however, field reconnaissance shows that all the valves are 4-inch valves. A spreadsheet provided by RMC shows that there are four Cla-Valve air valves, seven ARI air valves, 14 Crispin air valves, and 31 Valmatic air valves. In researching the valve models provided on the spreadsheet, the Valmatic valves are combination sewage air valves. The Cla-Valves appear to be simple sewage air release valves, the ARI valves are sewage combination air valves, and the model numbers provided for the Crispin valves are standard air and vacuum valves.

Combination air valves (CAV), such as the Valmatic and ARI valves, will allow air to enter through the large orifice during a vacuum condition and upon repressurization, either during a surge event or filling, will vent the air out through the same large orifice. A small orifice on the valve is used to vent air that accumulates over time under normal operations. Because air can vent from the pipeline rapidly during pipeline filling, these valves can slam closed when all the air is vented, leading to the creation of waterhammers within the pressurized part of the system and possible damage to the valves. The Crispin valves behave the same and the CAVs except there is no small orifice air release valve so there is no way to release small quantities of air that accumulates over time at these valve locations.

Air release valves (ARV), such as the Cla-Valve valves, have small orifices that only vent air that accumulates over time under normal operations. Thus, the Cla-Valve valves will not provide any protection from vacuum conditions in the pipeline, nor will they vent large volumes of air during pipeline filling.

From Valmatic catalog information, 4-inch sewage CAVs have a flow capacity of over 30 cfs with four psi pressure loss across the valve. With a maximum flow in Reach V of 17.8 cfs (11.5 mgd), the 4-inch valves, if fully operational, have sufficient capacity for the system. The Crispin valves have a similar capacity as the Valmatic valves. Catalog information for the ARI valves indicate that even though the valves are listed as 4-inch valves, they have an orifice area of only 1.246 in^2, which is equivalent to a diameter of approximately 1.25 inches. For a 4 psi pressure loss across the valve, their catalog shows that the valve has a capacity of 75 cfm, which corresponds to 1.25 cfs. Thus, if this information is correct, these valves are undersized for this system according to sizing criteria from other manufacturers' catalogs.

A pressure surge analysis of the Brine Line Lateral was performed for EMWD by CDM. Results of this analysis are discussed in a draft technical memorandum dated September 20, 2010. This analysis started at the IEEC pump station and terminated at the PSS; it did not analyze the effect the pressure surges would have on Reach V. This analysis showed that the loss of power to the three pump stations feeding the brine line would result in negative pressure issues at the high points along

the line. It was recommended that the existing air valves at the high points be changed to vacuum relief valves to prevent the type of valve slam discussed above.

Our review of the results of this previous analysis show that the pressure drop waves that propagate through the brine line will travel into Reach V through the PSS. The vent at the manhole located at the local high point at STA 162+46 will transition the flow from pressure full pipe flow to open channel gravity flow downstream of this location. The pressure downsurge wave from the pump stations would not pass this point. We can conclude that it does not seem possible that a pressure surge from these pump stations led to the failure of the Reach V pipeline at STA 555+61.

As was mentioned previously, the rapid venting of air from CAVs during a surge event or during filling of the pipeline can result in additional waterhammers that can create high pressures which could potentially lead to damage to the pipeline and possibly also the CAV. The HGL elevations depicted in Figure 1 show that upstream of the pipeline break at STA 555+61, the pipeline will fill such that at least two existing Valmatic CAVs that are open and allowing for open channel flow in the system at a flow of two mgd but will be under pressure and closed at a flow of 11.5 mgd. During this transition from open channel flow to pressure flow in this part of the pipeline as the flow is increased, the line will be filled and air will vent through these valves. If the filling occurs quickly, it may be possible that these valves could slam closed upon completion of the venting of the air and create the additional waterhammers previously discussed.

Ideally, to prevent the rapid venting of air and subsequent slamming of the CAVs, the pipeline should be filled no faster than approximately 1 ft/sec as explained in AWWA Manual of Water Supply Practices M51. Often, this is not possible so the venting of the air must be controlled in another way, or the slamming of the valve must be prevented.

To control the slamming of the existing CAVs during filling, they can be equipped with a slow closing feature. A slow closing feature would involve installing an ‘anti-slam’ or ‘surge check’ valve immediately underneath the CAV. This surge check valve behaves as a regular check valve in that it is open during normal operation when there is cascading flow at the valve location and it is closed when the pipeline is pressurized and flowing full. During the filling process, air will vent through the CAV as it normally would but when all the air is vented and the water tries to enter the CAV, the surge check valve closes, preventing the water from rapidly filling the valve body and slamming the CAV closed. Holes drilled in the surge check valves allow water to bleed through and fill the CAV body more slowly.

Another alternative is to control the rate at which the air is vented from the system. This would require the replacement of the existing CAVs with a vacuum relief/air inlet valve in combination with a small orifice air release valve (e.g., APCO Series 1500C, Valmatic 1800VB/38, Crispin VR 31/M5, or equivalent). This is similar to the type of valve recommended in the CDM report. Thus, to prevent the possibility of slamming the existing CAVs closed during the filling of the line, the valves that are open under low flow conditions but are under pressure in the high flow condition can be retrofitted or replaced as described above.

SAWPA - Inland Empire Brine Line Reach V Pipeline Condition Study

Figure 1 - EMWD Brine Line Lateral and Reach V pipeline

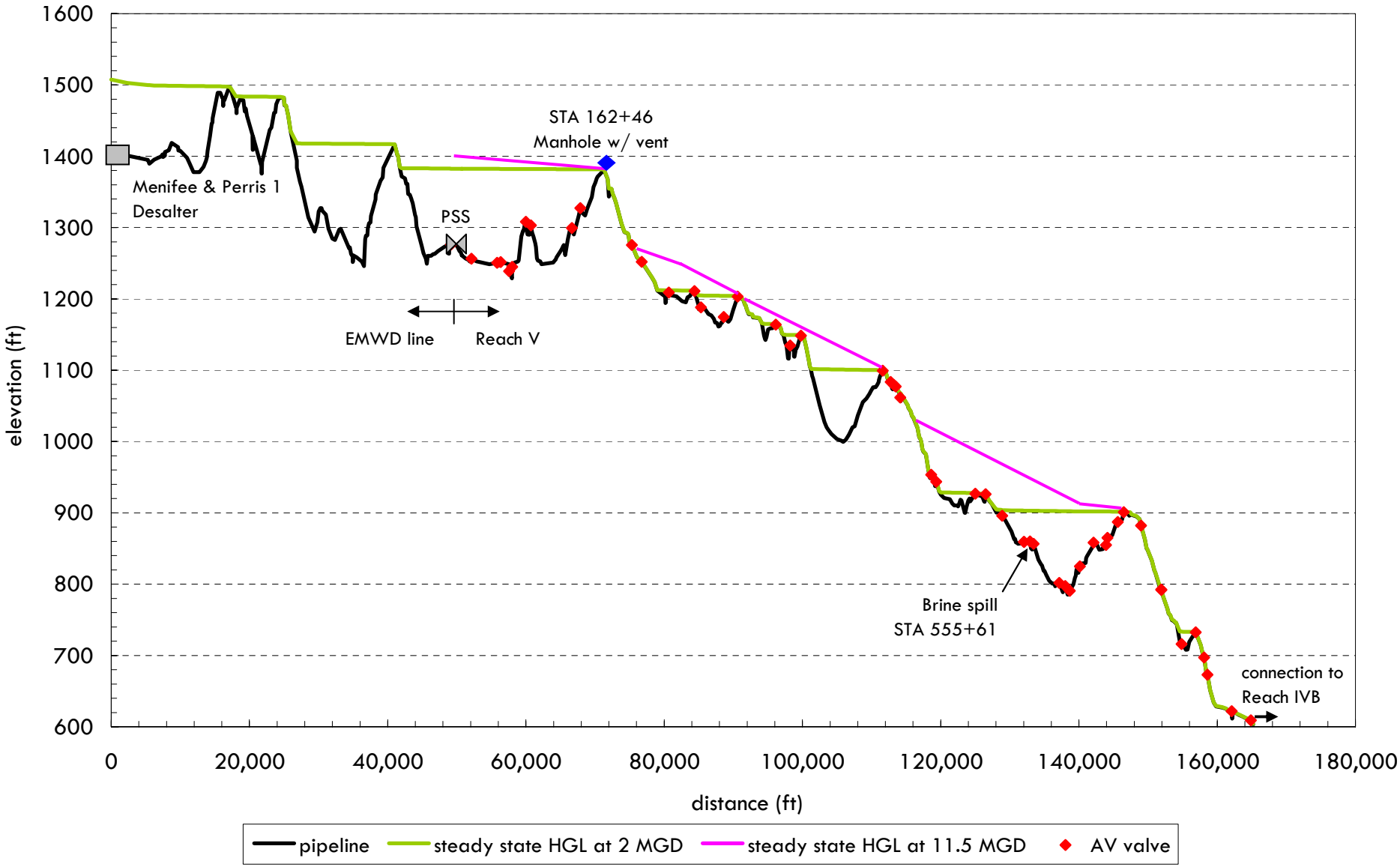

FLOW SCIENCE®

Appendix C - Detailed Breakdown of Risk Assessment Results

Detailed Breakdown of Risk Assessment Results

Segments				Likelihood of Failure		Consequences of Failure						Risk		Recommendation
Contract	RMC ID	MOID	Segment Length (FT)	Score (Based on: Depth, Pressure, Added Depth)	Reason	Commuter Impact Score (15%)	Land Use Score (20%)	Surface Water Score (30%)	Environ. Score (20%)	Infra. Score (15%)	Weighted Score (Sum)	Risk Score (Likelihood x Consequence)	Risk Grade (Low = 0-20, Med = 20-50, High = 50+)	Project
Contracts I/III	1	83	189	5	Depth	7	4	10	4	10	7.15	35.75	Medium	Short Term
	2	84	27	7	Depth	1	4	10	4	10	6.25	43.75	Medium	Short Term
	3	85	30	7	Depth	1	4	10	4	1	4.90	34.30	Medium	Short Term
	4	86	30	8	Depth	10	4	10	4	4	6.70	53.60	High	Short Term
	5	87	39	8	Depth	10	1	10	4	10	7.00	56.00	High	Short Term
	6	88	40	10	Depth	10	1	10	4	10	7.00	70.00	High	Short Term
	7	89	45	10	Depth	10	1	10	4	10	7.00	70.00	High	Short Term
	8	90	98	10	Depth	10	1	10	4	10	7.00	70.00	High	Short Term
	9	91	51	10	Depth	10	7	10	4	10	8.20	82.00	High	Short Term
	10	92	61	10	Depth	1	7	10	4	1	5.50	55.00	High	Short Term
	11	93	145	10	Depth	1	7	10	4	10	6.85	68.50	High	Short Term
	12	94	207	10	Depth	1	7	10	4	10	6.85	68.50	High	Short Term
	13	95	367	8	Depth	1	7	10	4	10	6.85	54.80	High	Short Term
	14	96	148	9	Depth	1	7	10	4	10	6.85	61.65	High	Short Term
	15	97	175	9	Depth	1	1	10	4	10	5.65	50.85	High	Short Term
	16	98	124	8	Depth	1	10	7	4	10	6.55	52.40	High	Short Term
	17	99	370	8	Depth	1	10	7	4	10	6.55	52.40	High	Short Term
	18	100	142	10	Depth	1	10	7	4	10	6.55	65.50	High	Short Term
	19	101	198	8	Depth	1	10	7	4	10	6.55	52.40	High	Short Term
	20	102	520	6	Depth	10	10	10	4	10	8.80	52.80	High	Short Term
	21	103	502	8	Depth	10	10	10	1	10	8.20	65.60	High	Short Term
	22	104	71	6	Depth	10	10	10	1	10	8.20	49.20	Medium	Long Term
	23	105	132	6	Depth	1	10	10	1	1	5.50	33.00	Medium	Long Term
	24	106	293	6	Depth	1	10	10	4	1	6.10	36.60	Medium	Long Term
	25	107	409	4	Depth	1	10	7	4	10	6.55	26.20	Medium	Long Term
	26	108	86	4	Depth	1	10	7	4	1	5.20	20.80	Medium	Long Term
	27	109	414	4	Depth	1	10	7	4	4	5.65	22.60	Medium	Short Term
	28	110	197	6	Depth	1	10	4	4	10	5.65	33.90	Medium	Short Term
	29	111	106	4	Depth	1	10	4	4	1	4.30	17.20	Low	Short Term
	30	112	62	4	Depth	1	10	4	7	1	4.90	19.60	Low	None
	31	113	220	4	Depth	1	10	4	7	1	4.90	19.60	Low	None
	32	114	125	3	Depth	10	10	4	7	1	6.25	18.75	Low	None
	33	115	102	4	Depth	10	10	4	7	1	6.25	25.00	Medium	Long Term
	34	116	300	5	Depth	10	10	7	7	4	7.60	38.00	Medium	Long Term
	35	117	725	10	Depth	1	10	7	7	10	7.15	71.50	High	Short Term
	36	118	45	7	Depth	1	10	7	7	10	7.15	50.05	High	Short Term
	37	119	53	7	Depth	1	10	7	7	10	7.15	50.05	High	Short Term
	38	120	107	8	Depth	1	10	7	7	4	6.25	50.00	Medium	Short Term
	39	121	180	8	Depth	10	10	10	7	4	8.50	68.00	High	Short Term
	40	122	126	5	Depth	1	10	10	7	10	8.05	40.25	Medium	Long Term
	41	123	110	5	Depth	1	10	10	7	4	7.15	35.75	Medium	Long Term
	42	124	108	5	Depth	1	10	10	7	4	7.15	35.75	Medium	Long Term
	43	125	602	5	Depth	1	10	10	7	7	7.60	38.00	Medium	Long Term
	44	126	210	5	Depth	10	10	10	7	10	9.40	47.00	Medium	Long Term
	45	127	634	8	Depth	1	10	10	7	10	8.05	64.40	High	Short Term
	46	128	85	8	Depth	7	7	7	7	4	6.55	52.40	High	Short Term
	47	129	250	8	Depth	7	7	7	7	10	7.45	59.60	High	Short Term
	48	130	102	5	Depth	7	7	7	7	4	6.55	32.75	Medium	Long Term
	49	131	140	5	Depth	7	4	7	4	10	6.25	31.25	Medium	Long Term
	50	132	362	2	Depth	7	4	7	4	4	5.35	10.70	Low	None
	51	133	955	2	Depth	7	4	7	4	10	6.25	12.50	Low	None
	52	134	400	8	Deflection	7	1	4	4	10	4.75	38.00	Medium	Short Term
	53	135	172	7	Deflection	7	1	4	4	10	4.75	33.25	Medium	Short Term
	54	136	165	1	Depth	10	1	4	4	10	5.20	5.20	Low	None
	55	137	497	1	Depth	1	7	4	4	10	5.05	5.05	Low	None
	56	138	663	1	Depth	1	7	7	4	10	5.95	5.95	Low	None
	57	139	381	2	Depth	1	7	7	4	10	5.95	11.90	Low	None
	58	140	522	7	Depth	1	7	10	1	10	6.25	43.75	Medium	Short Term
	59	141	133	7	Depth	10	7	10	1	10	7.60	53.20	High	Short Term
	60	142	72	7	Depth	1	4	10	1	10	5.65	39.55	Medium	Short Term
	61	143	267	6	Depth	1	4	10	1	10	5.65	33.90	Medium	Short Term
	62	601	487	1	Depth	1	4	10	1	10	5.65	5.65	Low	None
	63	602	81	1	Depth	1	4	7	1	10	4.75	4.75	Low	None
	64	603	445	1	Depth	1	10	7	4	10	6.55	6.55	Low	None
	65	604	720	1	Depth	1	10	7	7	10	7.15	7.15	Low	None
	66	605	104	2	Depth	1	10	7	7	4	6.25	12.50	Low	None
	67	144	201	4	Depth	1	10	10	7	4	7.15	28.60	Medium	Short Term
	68	145	227	6	Depth	10	10	10	7	4	8.50	51.00	High	Short Term
	69	146	189	7	Depth	7	1	10	10	10	7.75	54.25	High	Short Term
	70	147	68	4	Depth	7	1	10	10	1	6.40	25.60	Medium	Short Term
	71	148	469	3	Depth	7	1	10	10	10	7.75	23.25	Medium	Long Term
	72	149	128	2	Depth	7	1	10	10	10	7.75	15.50	Low	Long Term
	73	150	157	3	Depth	7	1	10	10	10	7.75	23.25	Medium	Long Term
	74	151	205	3	Depth	7	1	10	10	10	7.75	23.25	Medium	Long Term
	75	329	81	3	Depth	7	1	10	10	10	7.75	23.25	Medium	Long Term
	76	152	104	3	Depth	7	4	10	10	4	7.45	22.35	Medium	Long Term
	77	153	139	5	Depth	7	4	10	10	10	8.35	41.75	Medium	Long Term

Detailed Breakdown of Risk Assessment Results

Segments				Likelihood of Failure		Consequences of Failure						Risk		Recommendation
Contract	RMC ID	MOID	Segment Length (FT)	Score (Based on: Depth, Pressure, Added Depth)	Reason	Commuter Impact Score (15%)	Land Use Score (20%)	Surface Water Score (30%)	Environ. Score (20%)	Infra. Score (15%)	Weighted Score (Sum)	Risk Score (Likelihood x Consequence)	Risk Grade (Low = 0-20, Med = 20-50, High = 50+)	Project
	78	154	142	3	Depth	7	4	10	10	10	8.35	25.05	Medium	Long Term
	79	155	349	2	Depth	7	4	7	10	10	7.45	14.90	Low	None
	80	156	842	2	Depth	7	4	10	10	10	8.35	16.70	Low	None
	81	157	461	7	Deflection	10	10	10	10	10	10.00	70.00	High	Short Term
	82	158	251	3	Depth	1	10	10	7	10	8.05	24.15	Medium	Short Term
	83	159	290	3	Depth	1	10	10	7	10	8.05	24.15	Medium	Short Term
	84	160	131	6	Depth	1	10	10	7	10	8.05	48.30	Medium	Short Term
	85	161	110	6	Depth	1	10	10	7	10	8.05	48.30	Medium	Short Term
	86	162	60	2	Depth	1	10	10	7	10	8.05	16.10	Low	Short Term
	87	163	99	3	Depth	1	10	10	7	4	7.15	21.45	Medium	Short Term
	88	164	146	2	Depth	1	10	10	7	4	7.15	14.30	Low	Short Term
	89	165	312	7	Depth	1	10	10	7	10	8.05	56.35	High	Short Term
	90	166	102	7	Depth	1	10	10	7	10	8.05	56.35	High	Short Term
	91	167	102	7	Depth	1	10	10	7	1	6.70	46.90	Medium	Short Term
	92	168	221	7	Depth	1	10	10	7	1	6.70	46.90	Medium	Short Term
	93	169	329	2	Depth	10	10	10	7	1	8.05	16.10	Low	None
	94	170	398	4	Depth	10	10	10	7	1	8.05	32.20	Medium	Long Term
	95	171	130	4	Depth	10	10	7	7	1	7.15	28.60	Medium	Long Term
	96	172	101	2	Depth	10	1	7	7	4	5.80	11.60	Low	Long Term
	97	173	137	3	Depth	10	7	7	7	10	7.90	23.70	Medium	Long Term
	98	174	212	4	Depth	10	7	7	7	4	7.00	28.00	Medium	Long Term
	99	175	239	3	Depth	10	7	7	7	10	7.90	23.70	Medium	Long Term
	100	176	570	4	Depth	10	7	10	7	10	8.80	35.20	Medium	Long Term
	101	177	228	3	Depth	1	7	10	7	4	6.55	19.65	Low	None
	102	178	150	1	Depth	1	7	10	7	4	6.55	6.55	Low	None
	103	179	351	1	Depth	1	7	10	7	10	7.45	7.45	Low	None
	104	180	88	1	Depth	1	7	10	7	4	6.55	6.55	Low	None
	105	181	834	2	Depth	1	1	10	7	10	6.25	12.50	Low	None
	106	700	15	2	Depth	10	1	10	7	10	7.60	15.20	Low	None
	107	701	46	7	Depth	10	1	10	7	10	7.60	53.20	High	Short Term
	108	702	14	6	Depth	7	1	10	7	10	7.15	42.90	Medium	Short Term
	109	703	21	6	Depth	7	1	10	7	10	7.15	42.90	Medium	Short Term
	110	182	121	4	Depth	7	1	10	7	10	7.15	28.60	Medium	Short Term
	111	183	129	1	Depth	7	1	10	7	4	6.25	6.25	Low	Short Term
	112	184	176	5	Deflection	10	1	10	7	4	6.70	33.50	Medium	Short Term
	113	185B	198	1	Depth	7	1	10	7	4	6.25	6.25	Low	None
	114	186	117	1	Depth	7	1	10	7	7	6.70	6.70	Low	None
	115	187	163	1	Depth	7	1	10	7	4	6.25	6.25	Low	None
	116	188	139	5	Depth	7	1	10	7	4	6.25	31.25	Medium	Short Term
	117	189	113	7	Depth	7	1	10	7	10	7.15	50.05	High	Short Term
	118	190	53	7	Depth	7	1	10	7	4	6.25	43.75	Medium	Short Term
	119	191	259	6	Depth	10	7	10	7	10	8.80	52.80	High	Short Term
	120	192	42	6	Depth	10	7	10	7	10	8.80	52.80	High	Short Term
	121	234	407	2	Depth	10	1	10	7	4	6.70	13.40	Low	Short Term
	122	235	150	2	Depth	7	1	10	7	7	6.70	13.40	Low	Short Term
	123	236	40	2	Depth	7	1	10	7	4	6.25	12.50	Low	Short Term
	124	237	229	8	Depth	7	4	10	7	4	6.85	54.80	High	Short Term
	125	238	50	9	Depth	7	4	10	7	4	6.85	61.65	High	Short Term
	126	239	10	2	Depth	7	4	10	7	4	6.85	13.70	Low	None
	127	240	230	1	Depth	7	4	10	7	7	7.30	7.30	Low	None
	128	241	148	1	Depth	7	1	10	7	4	6.25	6.25	Low	None
	129	242	189	2	Depth	7	1	10	7	1	5.80	11.60	Low	Long Term
	130	330	70	5	Depth	7	1	10	7	1	5.80	29.00	Medium	Long Term
	131	243	19	2	Depth	1	1	10	7	1	4.90	9.80	Low	Long Term
	132	331	13	1	Depth	1	1	10	7	1	4.90	4.90	Low	None
	133	244	65	1	Depth	1	1	10	7	1	4.90	4.90	Low	None
	134	245	95	3	Depth	1	1	10	7	1	4.90	14.70	Low	None
	135	246	201	2	Depth	1	1	10	7	1	4.90	9.80	Low	None
	136	247	159	3	Depth	7	1	10	7	1	5.80	17.40	Low	None
	137	248	290	3	Depth	7	1	10	7	1	5.80	17.40	Low	None
	138	249	180	3	Depth	7	1	10	7	10	7.15	21.45	Medium	Long Term
	139	250	219	3	Depth	7	4	10	7	1	6.40	19.20	Low	None
	140	251	690	3	Depth	7	4	10	7	1	6.40	19.20	Low	None
	141	252	279	2	Depth	10	4	10	7	1	6.85	13.70	Low	None
	142	253	199	2	Depth	10	4	10	7	10	8.20	16.40	Low	None
	143	254	130	2	Depth	7	4	10	7	10	7.75	15.50	Low	None
	144	255	150	1	Depth	7	4	10	7	10	7.75	7.75	Low	None
	145	256	354	1	Depth	10	4	10	7	4	7.30	7.30	Low	None
	146	257	224	1	Depth	7	4	10	7	4	6.85	6.85	Low	None
	147	258	169	1	Depth	7	4	10	7	4	6.85	6.85	Low	None
	148	259	70	1	Depth	7	4	10	7	4	6.85	6.85	Low	None
	149	260	108	1	Depth	7	4	10	7	4	6.85	6.85	Low	None
	150	261	320	1	Depth	7	1	10	7	4	6.25	6.25	Low	None
	151	262	380	1	Depth	7	1	10	7	7	6.70	6.70	Low	None
	152	263	720	2	Depth	10	4	10	10	7	8.35	16.70	Low	None
	153	264	180	2	Depth	7	1	10	10	4	6.85	13.70	Low	None
Contracts IV Area of Concern	154	265	109	4	Depth	7	4	10	10	4	7.45	29.80	Medium	Long Term

Detailed Breakdown of Risk Assessment Results

Segments				Likelihood of Failure		Consequences of Failure						Risk		Recommendation
Contract	RMC ID	MOID	Segment Length (FT)	Score (Based on: Depth, Pressure, Added Depth)	Reason	Commuter Impact Score (15%)	Land Use Score (20%)	Surface Water Score (30%)	Environ. Score (20%)	Infra. Score (15%)	Weighted Score (Sum)	Risk Score (Likelihood x Consequence)	Risk Grade (Low = 0-20, Med = 20-50, High = 50+)	Project
	155	266	525	6	Depth	7	4	10	10	4	7.45	44.70	Medium	Long Term
	156	267	160	1	Depth	7	4	10	10	1	7.00	7.00	Low	None
	157	268	92	1	Depth	7	4	10	10	1	7.00	7.00	Low	None
	158	269	182	1	Depth	7	4	10	10	1	7.00	7.00	Low	None
	159	270	110	1	Depth	10	4	10	10	10	8.80	8.80	Low	None
	160	271	220	1	Depth	7	4	10	10	1	7.00	7.00	Low	None
	161	272	460	2	Depth	10	4	10	10	10	8.80	17.60	Low	None
	162	273	362	1	Depth	7	4	10	7	10	7.75	7.75	Low	None
	163	274	639	1	Depth	7	4	10	7	7	7.30	7.30	Low	None
	164	275	395	1	Depth	7	1	10	7	10	7.15	7.15	Low	None
	165	276	287	6	Depth	7	4	10	1	10	6.55	39.30	Medium	Long Term
	166	277	104	6	Depth	7	4	10	1	10	6.55	39.30	Medium	Long Term
	167	278	86	1	Depth	10	4	10	1	7	6.55	6.55	Low	None
	168	279	250	1	Depth	7	4	10	1	7	6.10	6.10	Low	None
	169	280	245	2	Depth	7	4	10	1	7	6.10	12.20	Low	None
	170	281	205	1	Depth	10	4	10	1	10	7.00	7.00	Low	None
	171	282	150	1	Depth	7	4	10	1	7	6.10	6.10	Low	None
	172	283	200	6	Depth	7	4	10	4	10	7.15	42.90	Medium	Long Term
	173	284	129	5	Depth	10	4	10	4	10	7.60	38.00	Medium	Long Term
	174	285	60	5	Depth	7	4	10	4	4	6.25	31.25	Medium	Long Term
Contract V Area of Concern	175	308	160	1	Depth	7	4	1	10	1	4.30	4.30	Low	None
	176	825	153	2	Depth	7	4	1	10	1	4.30	8.60	Low	None
	177	826	305	2	Depth	7	4	1	10	1	4.30	8.60	Low	None
	178	827	245	2	Depth	7	4	1	10	1	4.30	8.60	Low	None
	179	828	650	3	Depth	7	1	1	7	1	3.10	9.30	Low	None
	180	829	295	2	Depth	10	1	1	7	1	3.55	7.10	Low	None
	181	309	374	1	Depth	10	1	1	7	1	3.55	3.55	Low	None
	182	830	262	5	Depth	10	1	1	7	1	3.55	17.75	Low	None

Appendix D - Inventory of Existing Air Valves on Reach V

REACH V A/V VALVES

DATE	STATION#	A/V #	A/V Position	LOCATION	WORK PERFORMED	MAKE/MODEL/SIZE	COMMENTS
2/22/2012	150+00	AV 0030	Seated	Chaney/Collier street	exercised isolation valves, internal clean up and inspection	4"Valmatic 804x003	Valves turn freely and shutdown completely replaced float bolt
2/22/2012	127+14	AV 0050	Seated	3rd/Minthorn	exercised isolation valves, internal clean up and inspection	4"Valmatic 804x003	Valves turn freely and shutdown completely
2/23/2012	98+95	AV 0070	Seated	Pasadena St.	exercised isolation valves, internal clean up and inspection	4"Valmatic 804x003	Valves turn freely and shutdown completely
2/23/2012	94+00	AV 0080	Seated	Behind Junkyard	exercised isolation valves, internal clean up and inspection	4"Valmatic 804x003	Valves turn freely and shutdown completely
2/28/2012	81+61.86	AV 0090	Seated	Flood Contol Channel Along Riverside Dr.	exercised isolation valves, internal clean up and inspection	4"Valmatic 804x003	Valves turn freely and shutdown completely
2/29/2012	77+28.40	AV 0120	Seated	Baker St.	exercised isolation valves, internal clean up and inspection	4" Crispin AL41	found street valve and exercised. Valve turns freely and shutdown completely.
3/1/2012	58+07	AV 0140	Seated	Baker St.	exercised isolation valves, internal clean up and inspection	4"Valmatic 804x003	Valves turn freely and shutdown completely float was detached from arm reattached float
3/7/2013	50+26	AV 0160	Seated	Baker St.	exercised isolation valves, internal clean up and inspection. Cleared weeds	4"Valmatic 804x003	No valve at this location currently. Need to dissassemble and clean.
3/7/2013	209+11	AV 0180	Seated	Coal St.	Replaced val-matic with ARI D-025	ARI D-025 (replaced a 4"Valmatic 804x003)	Valves turn freely and shutdown completely

REACH V A/V VALVES

DATE	STATION#	A/V #	A/V Position	LOCATION	WORK PERFORMED	MAKE/MODEL/SIZE	COMMENTS
3/6/2012	196+93	AV 0200	Seated	Coal St.	exercised isolation valves, internal clean up and inspection. Cleared weeds	4"Valmatic 804x003	Valves turn freely and shutdown completely
	172+51	AV # ?			AV has been disconeccted from system		
	152+00	AV # ?			AV has been disconeccted from system		
	115+87	AV 0250		Lake St.		4"Valmatic 804x003	
3/7/2013	91+04	AV 0260	Seated	Lake St.	exercised isolation valves, internal clean up and inspection. Cleared weeds	ARI D-025 (replaced a 4"Valmatic 804x003)	Valves turn freely and shutdown completely
3/7/2012	Not in plans.	AV 0270	Open	Temescal Canyon Rd.	exercised isolation valves, internal clean up and inspection. Cleared weeds	4"Valmatic 804x003	Valves turn freely and shutdown completely Street valve was off when crew arrived left in open position
3/7/2012	53+00	AV 0290	Open	Temescal Canyon Rd.	exercised isolation valves, internal clean up and inspection, cleared weeds Stenciled id number on A/V valve	4"Valmatic 804x003	Valves turn freely and shutdown completely

REACH V A/V VALVES

DATE	STATION#	A/V #	A/V Position	LOCATION	WORK PERFORMED	MAKE/MODEL/SIZE	COMMENTS
3/7/2012	17+00	AV 0310	Open	Temescal Canyon Rd.	exercised isolation valves, internal clean up and inspection. Cleared weeds	4"Valmatic 804x003	Valves turn freely and shutdown completely
	82+52	AV 0330		Temescal Canyon Rd.		4"Valmatic 804x003	
	116+55	AV 0340		Temescal Canyon Rd.		4"cla-val 345-ww45-316k	
	136+47	AV 0350		Temescal Canyon Rd.		4"cla-val 345-ww45-316k	
3/12/2013	191+60	AV 0370		Temescal Canyon Rd.		ARI D-025 (replaced a 4"Valmatic 804x003)	
	211+67	AV 0380		Temescal Canyon Rd.		4"Valmatic 804x003	
	226+94	AV 0400		Temescal Canyon Rd.		4"Valmatic 804x003	
3/7/2012	Not in plans.	AV 0410	Open	Temescal Canyon Rd.	exercised isolation valves, internal clean up and inspection. Cleared weeds	4"Valmatic 804x003	Valves turn freely and shutdown completely
	345+30	AV 0430		Temescal Canyon Rd.		4"cla-val 345-ww45-316k	
8/21/2012	356+00	AV 0440	Open	Temescal Canyon Rd.	exercised isolation valves, internal clean up and inspection	4"cla-val 345-ww45-316k	Valves turn freely and shutdown completely
	361+00	AV 0450		Temescal Canyon Rd.		4"Valmatic 804x003	
	361+37	AV 0460		Temescal Canyon Rd.		4"Valmatic 804x003	
	364+16.5	AV 0470		Temescal Canyon Rd.		4"Valmatic 804x003	
	371+35	AV 0510		Temescal Canyon Rd.		4"Valmatic 804x003	
	415+10	AV 0550		Temescal Canyon Rd.		4"Valmatic 804x003	
	422+79	AV 0570		Temescal Canyon Rd.		4"Valmatic 804x003	
	455+20	AV 0590		Temescal Canyon Rd.		4"Valmatic 804x003	
	477+71	AV 0630		Temescal Canyon Rd.		4"Valmatic 804x003	
	489+00	AV 0650		Temescal Canyon Rd.		4"Valmatic 804x003	
3/12/2013	512+45	AV 0670		Temescal Canyon Rd.		ARI D-025 (replaced a 4"Valmatic 804x003)	
	543+10	AV 0710		Temescal Canyon Rd.		ARI D-025 (replaced a 4"Valmatic 804x003)	
	543+10	AV 0710		Temescal Canyon Rd.		4"Valmatic 804x003	

REACH V A/V VALVES

DATE	STATION#	A/V #	A/V Position	LOCATION	WORK PERFORMED	MAKE/MODEL/SIZE	COMMENTS
	545+50	AV 0730		Temescal Canyon Rd.		ARI D-025 (replaced a 4"Valmatic 804x003)	
	559+30	AV 0750		Temescal Canyon Rd.		4"Valmatic 804x003	
		AV 0780		Temescal Canyon Rd.		4"Valmatic 804x003	
9/11/2012	596+84	AV 0810	Closed	Temescal Canyon Rd.	exercised isolation valves, internal clean up and inspection	ARI D-025 (replaced a 4"Valmatic 804x003)	Isolation valve in open position
	605+11	AV 0830		Temescal Canyon Rd.		4"Valmatic 804x003	
		AV 0840					
8/21/2012	256+74	AV 0870	Open	Temescal Canyon Rd.	exercised isolation valves, internal clean up and inspection	4" Crispin AL41	Valves turn freely and shutdown completely
8/21/2012	235+23	AV 0880	Open	Temescal Canyon Rd.	exercised isolation valves, internal clean up and inspection, Stenciled id number on A/V valve	4" Crispin AL41	Valve turns freely and shutdown completely, Street valve is missing
9/12/2012	220+19	AV 0900	Open	Ontario Ave/Temescal	Checked A/V unit needs repairs	4" Crispin AL41	Isolation valve is broken, Street valve is broken
9/12/2012	216+70	AV 0910	Seated	Ontario Ave/Temescal	exercised isolation valves, internal clean up and inspection	4" Crispin AL41	Valves turn freely
9/12/2012	202+40	AV 0920	Seated	Ontario Ave/Temescal	exercised isolation valves, internal clean up and inspection	4" Crispin AL41	Valves turn freely
	191+55	AV 0930		Ontario Ave/Temescal		4" Crispin AL41	

8/22/2012	138+65	AV 0945	Open	Compton Ave	exercised isolation valves, internal clean up and inspection, Stenciled id number on A/V valve	4" Crispin AL41	Valves turn freely
8/22/2012	137+31	AV 0950	Open	Compton Ave	exercised isolation valves, internal clean up and inspection, Stenciled id number on A/V valve	4" Crispin AL41	Valves turn freely
9/11/2012		AV 0960	Open	Compton Ave	Installed A/V valve	4" Crispin AL41	Valves turn freely

REACH V A/V VALVES

DATE	STATION#	A/V #	A/V Position	LOCATION	WORK PERFORMED	MAKE/MODEL/SIZE	COMMENTS
	105+13	AV 0970		California Ave		4" Crispin AL41	
	87+18	AV 0990		Rimpau		4" Crispin AL41	
	75 +19	AV 1000		Magnolia Ave,		4"Valmatic 804x003	
	70+50	AV 1010		EL Sobrante Rd.		4"Valmatic 804x003	
	35+47	AV 1030		Flood Control Channel		4" Crispin AL41	
	8+94	AV 1040		Flood Control Channel		4" Crispin AL41	

Color Legend

Work Pending

SAWPA to verify

Not In Plans

Need SAWPA Assistance

Appendix E - Cost Estimate Unit Cost Criteria

Project: Santa Ana Watershed Project Authority Inland Empire Brine Line Reach V Pipeline Condition Study

Date: May 10, 2013

Project No: 0183-001.00

Aspect: Conceptual Level Construction Cost Estimate

Estimate Type: Conceptual Level Construction Cost Estimate

Cost Criteria

Cost Estimate Basis

Unit cost estimates are based on the following and have been escalated to the February 2013 Los Angeles CCI ENR:

February 2013 CCI	9453.00	1.06

Reference Unit Costs

Item	Unit Price	Unit	Unit Price (Feb 2013 $)
Division 2 - Site Work			
Grade subgrade for base course, roadways (for small irregular areas)	$2.46	SY	$2.60
Base course for roadways (crushed 3/4" stone base, compacted, 3" deep)	$5.30	SY	$5.61
Asphaltic concrete paving (6" stone base, 2" binder course, 2" topping)	$3.05	SF	$3.23
Pipe bedding, not incl. compaction, crushed stone 3/4" to 1/2"	$53.50	LCY	$56.58
Backfill, by hand, vibrating plate, compaction in 6" layers	$37.60	LCY	$39.77
Sheet piling wood, 8' deep	$9.05	SF	$9.57
Chain link fence, 6' high, 3 strands barb wire, 2" posts @ 10' O.C., set in concrete, aluminized steel	$29.50	LF	$31.20
Pipe bollards, conc filled/paint, 6"	$790.00	EA	$835.49
Excavating, bulk, dozer (300' haul, common earth)	$10.90	BCY	$11.53
Backfill, dozer (common, from existing stockpile, no compaction)	$3.15	LCY	$3.33
Hauling, 12 CY truck, 35 MPH ave, cycle 40 miles	$13.55	LCY	$14.33
Jute mesh, 100 S.Y. per roll, 4' wide, stapled	$1.47	SY	$1.55
Finish grading for base course, large parking lots	$0.98	SY	$1.04
Fine grade for slab on grade, machine	$1.50	SY	$1.59

Item	Feb-13 Unit Price	Original Ref. Unit Price	Unit
Division 2 - Site Work			
Clear and Grub	$5,925.83	$5,600.00	Acre

Ripping				
Finish Grading, Small area to be paved	$3.95		$3.73	SY
Trench Excavation Cost (6' - 10' deep)	$13.56		$12.99	CY
Trench Excavation Cost (10' - 14' deep)	$14.69		$14.07	CY
Trench Excavation Cost (14' - 20' deep)	$4		$3.94	CY
Shoring (8' deep)	$3.08	$	2.44	SF
Shoring (12' deep)	$3.56	$	2.82	SF
Shoring (15' deep)	$4.39	$	3.48	SF
Ripping	$3.54		$3.35	CY
Structural Backfill	$2.44		$2.31	CY
Compaction	$1.59		$1.50	CY
New AC Pavement w/ Base	$4.12		$3.30	SF
New AC Pavement w/ Base	$5.04		$5.00	SF
Pavement Restoration	$83	$	65.85	SY
Dewatering	$258.82		$205.00	day
Gravel Fill Under Slab	$43.74		$35.00	CY
Hauling	$2.37	$	2.24	CY
Jute mesh	$1.24		$1.19	SY
Trench Backfill	$21		$17.00	CY
Pipe Bedding Material	$44		$35.00	CY
Trench Subbase	$44		$35.00	CY
Shoring (8' deep)	$3		$2.44	SF
Shoring (12' deep)	$4		$2.82	SF
Shoring (15' deep)	$4		$3.48	SF
Excavation Sheet Piling (15' deep)	$25		$19.90	SF
Excavation Sheet Piling (20' deep)	$30		$23.40	SF
Excavation Sheet Piling (25' deep)	$31		$24.25	SF
Division 15 - Mechanical				
Valves, installed				
Plug Valves				
4"	$1,628	$	1,560	EA
6"	$1,837	$	1,760	EA
8"	$2,171	$	2,080	EA
10"	$3,486	$	3,340	EA
12"	$4,039	$	3,870	EA
14"	$6,472	$	6,200	EA
16"	$7,442	$	7,130	EA
18"	$8,256	$	7,910	EA
20"	$10,501	$	10,060	EA
24"	$21,961	$	21,040	EA
24" with special materials for brine (add 30%)	$28,549			
36"	$54,632	$	52,340	EA
Piping				
HDPE 24"	$222	$	220.00	LF

HDPE 20"		$297	$	285.00	LF			
HDPE 20"		$254	$	240.00	LF			
HDPE 22"		$227	$	217.50	LF			
HDPE 22" via HDD		$472	$	452.57	LF			
Pipe Installation								
HDPE Installation		$20		$18	LF			
HDPE Labor		$2,020		$1,794	Day			
From Vendor Quotes		**February 2013 Equipment Cost**		**Equipment Cost**	**Contractor's Overhead & Profit**	**Unit Cost**	**Reference**	**Notes**
HDPE Pipe (63" DR 32.5)		$215	$	190.00		$ 190.00 LF	P&F Distributors quote (25-September-07)	
HDPE Pipe (42" DR 32.5)	$	123.87	$	110.00		$ 110.00 LF	P&F Distributors quote (06-February-08)	
HDPE Pipe Fitting (90° elbow, 63")		$9,425	$	8,340.00		$ 8,340.00 EA	P&F Distributors quote (25-September-07)	
HDPE Pipe Fitting (63" x 48" reducer)		$13,840	$	12,246.00		$ 12,246.00 EA	P&F Distributors quote (25-September-07)	
HDPE Pipe Restraint (Wall Anchor)		$9,312	$	8,240.00		$ 8,240.00 EA	P&F Distributors quote (25-September-07)	
APCO CAVs								
4" APCO s-1500c, vacuum relief-air inlet/air release valve.		$950	$	2,400.00	Installed Cost			
3" APCO s-1500c, vacuum relief-air inlet/air release valve.		860	$	2,200.00	Installed Cost			
2" vacuum relief-air inlet/air release valve.		665	$	1,700.00	Installed Cost			

Dewatering

Short-Term Estimate

Wells installation per vertical foot	$50	vertical foot of well installed	
Per Well assuming each well is 20 feet deep	$750		
1 Well required per access pit on contracts 4 and 5 only. Pits spaced every 750 feet of pipe lined. 2 pits required per segment of pipe lined.	$4,088	Short-Term	Contracts 4 and 5 only
20% allowance for dewatering headers and other piping	$817.6		
Total Dewatering	$4,905.6		

Long-Term Estimate

New Open Cut

1 Well required per access pit on contracts 4 and 5 only. Pits spaced every 750 feet of pipe lined. 2 pits required per segment of pipe lined.	$38,500	Long-Term	Contracts 4 and 5 only
20% allowance for dewatering headers and other piping	$7,700.0		
Total Dewatering	$46,200		

CIPP

$8.92 per inch-diam/ft for City of Mountainview Shoreline Park Sewer Trunk Rehabilitation Project - 12-46	Bid in 2012
Included Cleaning and CCTV	

$15.39 per inch-diam/ft for City of Santa Clara Siphon Rehab Project Included Cleaning and CCTV	Bid in 2012	
$9.36 per inch-diam/ft for City of Stockton Tuxedo Avenue Rehab Project	Engineer's Estimate in 2011	

CIPP access pits: 6' X 6' X 15' deep

540 cubic feet of excavation = 20 cubic yards *$15/cy = $300
15 cy backfill and compaction = 15*$44 = $660
360 square feet of shoring = $4.39*360 = $1,580.40
Total: $2,540 per pit

24-inch Pipe Abandonment

Fill abandoned pipe with grout	$17.20 per linear foot (18")	Clear Fork Drainage Basin Sewer Improvements Project - June 2011
	$13.43 per linear foot (18")	City of Beaverton South Central H Sanitary Sewer Project - January 2012
Short-Term Estimate	$28.25 per linear foot (18")	District 3 On-Call Utility Services - June 2012
1,210 feet of 24" pipe	$16.15 per linear foot (18")	City of Charlotte Eastburn Storm Drain Improvements Project - March 2011
Long-Term Estimate	So, an average of $18.75 per linear foot for 18" pipe. Or, $1.04 per inch diameter.	
8,487 feet of 24" pipe	For 24" diameter pipe, that is $25 per linear foot. Adjusting for inflation and west coast factor: $2(	

Bypass Pumping

See Bypass Pumping Worksheet

Bypass Worksheet

DESCRIPTION		QUANTITY	UNITS	LABOR				EQUIPMENT		MATERIAL		SUBCONTRACTOR		TOTAL
				MH/UNIT	TOTAL MANHOURS	LABOR RATE	TOTAL COST	UNIT COST	TOTAL COST	UNIT COST	TOTAL COST	SUB	TOTAL COST	
Bypass Costs (subsequent set-up and moving of set-up every 1,500 feet)					-		-		-				-	-
Prep and Layout		13	EA	5.000	65.0	$68.00	$4,420		$0		$0		$0	$4,420
Labor to setup pipe (1,500LF AVG)		13	EA	21.000	273.0	$68.00	$18,564		$0		$0		$0	$18,564
Two Crew Trucks - setup		13	EA	21.000	273.0		$0	$50.08	$13,672		$0		$0	$13,672
Labor to teardown pipe (1,500LF AVG)		13	EA	48.000	624.0	$68.00	$42,432		$0		$0		$0	$42,432
Two Crew Trucks - teardown		13	EA	48.000	624.0		$0	$50.08	$31,250		$0		$0	$31,250
Pipe rental (50 foot lenghts)		13	EA	30.000	1131.0		$0		$0	$25.00	$28,275		$0	$28,275
Labor for pipe watch (AVG shot duration)		13	EA	18.000	234.0	$68.00	$15,912		$0		$0		$0	$15,912
Pipe watch vehicle		13	EA	18.000	234.0		$0	$19.78	$4,629		$0		$0	$4,629
													Total:	$159,153

Spreadsheet from RBF estimate for SARI CIPP Lining Project 2012

Bypass Pumping

Bypass pumping for 3.25 MGD would be about 12-inch diameter force main. Bypass pumping for 11 MGD would be about 18-inch diameter FM.

- Includes redundancy on the pipe and pumps.
- Assume $100/LF for any trenching of intersections.
- For 12-inch bypass with 2 pumps for 1,000-LF assume $10-15k to install.
- For 18-inch bypass with 2 pumps for 1,000-LF assume $16-20k to install.
- Plus $5-6k/ day for operation.
  (Direct Quote from King Pumping)

There are 22 intersections/driveways that need to be trenched in Short Term Project and 15 in Long-Term. Assume each intersection is 150 feet wide
(So, for 1,500 feet, assume $18,750 for initial pipe fusing and bypass installation.)
(So, for 1,500 feet, assume $25,000 for initial pipe fusing and bypass installation.)
Total Days for Short-Term = 150
Total Days for Long-Term = 150

SHORT-TERM PROJECT

Item	Unit	Quantity	Unit Cost	Total Cost	
Initial installation of 12-inch bypass with 2 pumps	LS	1	$ 18,750.00	$ 18,750.00	
Moving and installation each subsequent installation	LS	1	$ 159,153.00	$ 159,153.00	See above
Trenching Intersections	LF	3300	$ 100.00	$ 330,000.00	
Operation	Day	150	$ 5,000.00	$ 750,000.00	
				$ 1,257,903.00	

LONG-TERM PROJECT

Item	Unit	Quantity	Unit Cost	Total Cost	
Initial installation of 18-inch bypass with 2 pumps	LS	1	$ 25,000.00	$ 25,000.00	
Moving and installation each subsequent installation	LS	1	$ 159,153.00	$ 159,153.00	See above
Trenching Intersections	LF	2250	$ 100.00	$ 225,000.00	
Operation	Day	150	$ 5,000.00	$ 750,000.00	
				$ 1,159,153.00	

BRINE TRANSFER TO SUN CITY AERATION BASIN ESTIMATE - APRIL 2013

NO.	DESCRIPTION	UNIT	LABOR HOURS	LABOR $ HOURS	MATERIALS EXPENSE	EQUIPMENT EXPENSE	LABOR EXTENSION	MATERIALS EXTENSION	EQUIPMENT EXTENSION	SUB TOTAL	SECTION TOTAL
PIPING WORK THAT SHOULD BE INSTALLED ON A SEMI-PERMANENT BASIS.											
1	12"x 500' piping and related fittings to connect to existing highline.	1	120	$60.00	$10,000.00	$1,500.00	$7,200.00	$10,000.00	1,500	$18,700.00	
2	Float with high basin alarm notification	1	30	$70.00	1,000.00		$700.00	1,000.00		$1,700.00	
3	Fire Hose - wash down	700'			3,500.00			3,500.00		$3,500.00	
											23,900.00
ROUTINE COSTS PER EVENT											
4	Rental Pump	Week	10	$60.00		$2,500.00	$600.00		$2,500.00	$3,100.00	
	Fuel (pump)	3 Day shutdown	20	$60.00	3,000.00		$1,200.00	3,000.00		$4,200.00	
5	Clean up and wash down of basins with recycled water. Includes, vactor, bobcat tractor, and ventilation blower.	3 Days	120	$60.00		$1,000.00	$7,200.00		$1,000.00	$8,200.00	
6	Operation Costs (Wtr Ops)	3 Day shutdown	24	$60.00			$1,500.00			$1,500.00	
										$ PER EVENT	17,000.00
										TOTAL	40,900.00

Fuel - 72 hour run @ 10 gph x $4 gallon
Clean up - 4 man crew
Fire hose will be connected to Reach IV recycled water system. Hose can be stored and reused at a later date.

Provided by Eastern Municipal Water District - May 7, 2013